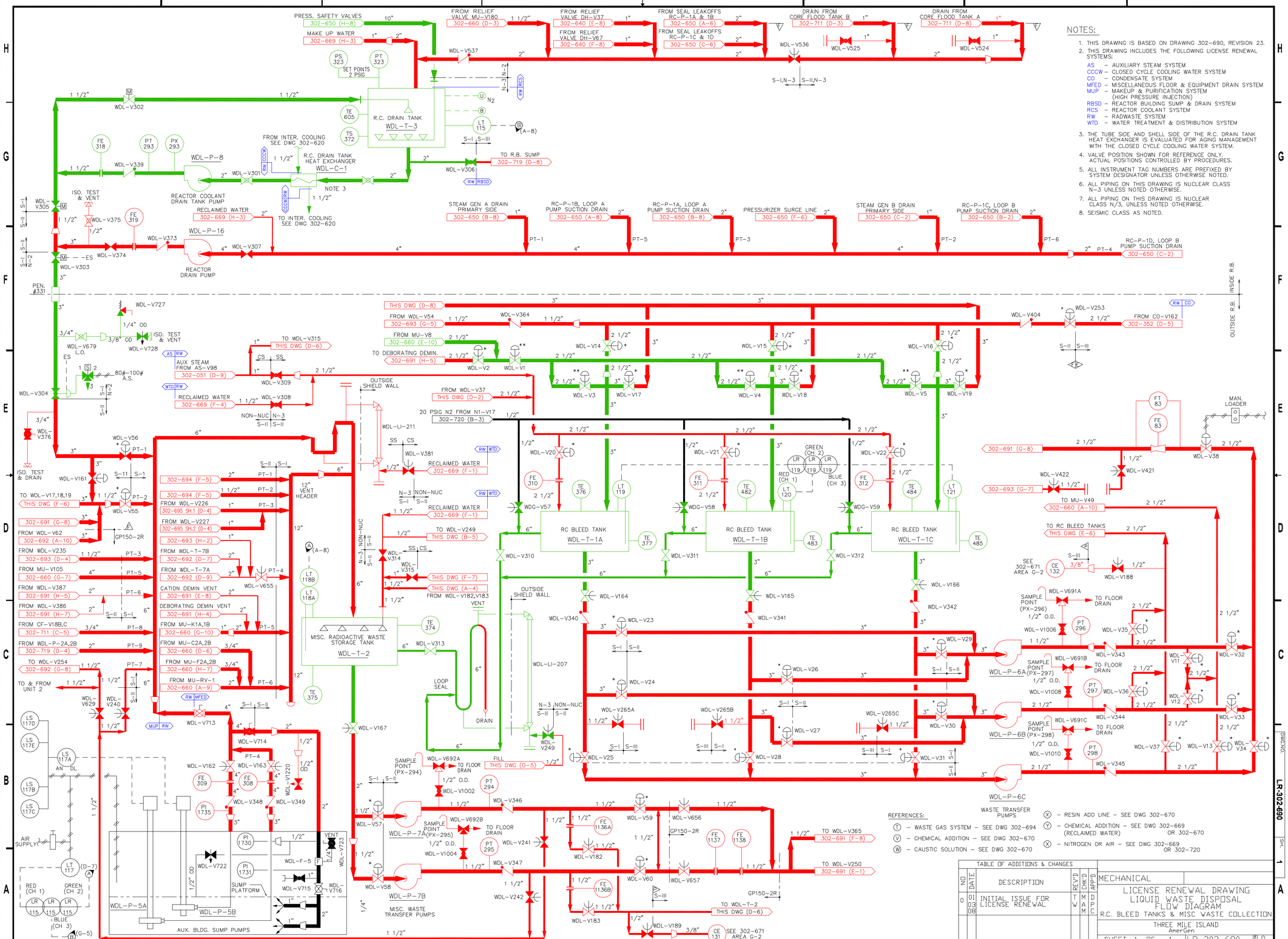

NOTES:

1. THIS DRAWING IS BASED ON DRAWING 302-690, REVISION 23.
2. THIS DRAWING INCLUDES THE FOLLOWING LICENSE RENEWAL SYSTEMS:
   - AS – AUXILIARY STEAM SYSTEM
   - CCCW – CLOSED CYCLE COOLING WATER SYSTEM
   - CD – CONDENSATE SYSTEM
   - MFED – MISCELLANEOUS FLOOR & EQUIPMENT DRAIN SYSTEM
   - MUP – MAKEUP & PURIFICATION SYSTEM (HIGH PRESSURE INJECTION)
   - RBSD – REACTOR BUILDING SUMP & DRAIN SYSTEM
   - RCS – REACTOR COOLANT SYSTEM
   - RW – RADWASTE SYSTEM
   - WTD – WATER TREATMENT & DISTRIBUTION SYSTEM
3. THE TUBE SIDE AND SHELL SIDE OF THE R.C. DRAIN TANK HEAT EXCHANGER IS EVALUATED FOR AGING MANAGEMENT WITH THE CLOSED CYCLE COOLING WATER SYSTEM.
4. VALVE POSITION SHOWN FOR REFERENCE ONLY. ACTUAL POSITIONS CONTROLLED BY PROCEDURES.
5. ALL INSTRUMENT TAG NUMBERS ARE PREFIXED BY SYSTEM DESIGNATOR UNLESS OTHERWISE NOTED.
6. ALL PIPING ON THIS DRAWING IS NUCLEAR CLASS N-3 UNLESS NOTED OTHERWISE.
7. ALL PIPING ON THIS DRAWING IS NUCLEAR CLASS N/3, UNLESS NOTED OTHERWISE.
8. SEISMIC CLASS AS NOTED.

REFERENCES:

- (T) – WASTE GAS SYSTEM – SEE DWG 302-694
- (V) – CHEMICAL ADDITION – SEE DWG 302-670
- (W) – CAUSTIC SOLUTION – SEE DWG 302-670
- (X) – RESIN ADD LINE – SEE DWG 302-670
- (Y) – CHEMICAL ADDITION – SEE DWG 302-669 (RECLAIMED WATER) OR 302-670
- (X) – NITROGEN OR AIR – SEE DWG 302-669 OR 302-720

TABLE OF ADDITIONS & CHANGES

NO	DATE	DESCRIPTION	REV'D	CHK'D	APP'D
0	01 03 08	INITIAL ISSUE FOR LICENSE RENEWAL	T W	M A M	D P C

MECHANICAL

LICENSE RENEWAL DRAWING
LIQUID WASTE DISPOSAL
FLOW DIAGRAM
R.C. BLEED TANKS & MISC WASTE COLLECTION

THREE MILE ISLAND
AmerGen

SHEET 1 OF 1 | LR-302-690 | REV 0

DWG.NO. LR-302-690 SH. 1

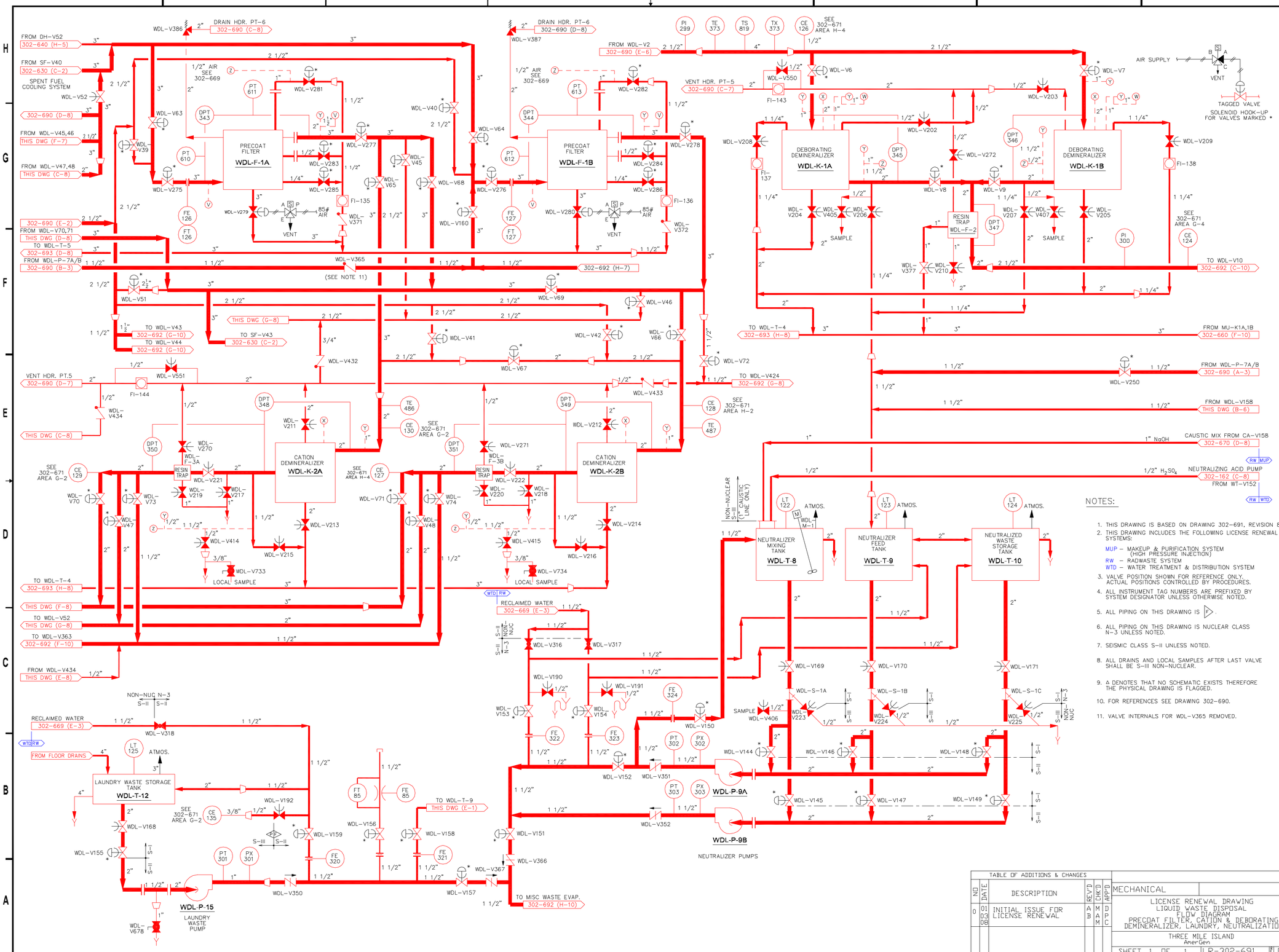

NOTES:

1. THIS DRAWING IS BASED ON DRAWING 302-691, REVISION 8.
2. THIS DRAWING INCLUDES THE FOLLOWING LICENSE RENEWAL SYSTEMS:
   MUP – MAKEUP & PURIFICATION SYSTEM (HIGH PRESSURE INJECTION)
   RW – RADWASTE SYSTEM
   WTD – WATER TREATMENT & DISTRIBUTION SYSTEM
3. VALVE POSITION SHOWN FOR REFERENCE ONLY. ACTUAL POSITIONS CONTROLLED BY PROCEDURES.
4. ALL INSTRUMENT TAG NUMBERS ARE PREFIXED BY SYSTEM DESIGNATOR UNLESS OTHERWISE NOTED.
5. ALL PIPING ON THIS DRAWING IS P.
6. ALL PIPING ON THIS DRAWING IS NUCLEAR CLASS N-3 UNLESS NOTED.
7. SEISMIC CLASS S-II UNLESS NOTED.
8. ALL DRAINS AND LOCAL SAMPLES AFTER LAST VALVE SHALL BE S-III NON-NUCLEAR.
9. Δ DENOTES THAT NO SCHEMATIC EXISTS THEREFORE THE PHYSICAL DRAWING IS FLAGGED.
10. FOR REFERENCES SEE DRAWING 302-690.
11. VALVE INTERNALS FOR WDL-V365 REMOVED.

TABLE OF ADDITIONS & CHANGES

NO	DATE	DESCRIPTION	REV'D	CHK'D	APP'D
0	01 03 03	INITIAL ISSUE FOR LICENSE RENEWAL	A B	M A M	D P C

MECHANICAL

LICENSE RENEWAL DRAWING
LIQUID WASTE DISPOSAL
FLOW DIAGRAM
PRECOAT FILTER, CATION & DEBORATING DEMINERALIZER, LAUNDRY, NEUTRALIZATION

THREE MILE ISLAND
AmerGen

SHEET 1 OF 1 LR-302-691 0

DWG.NO. LR-302-691 SH. 1

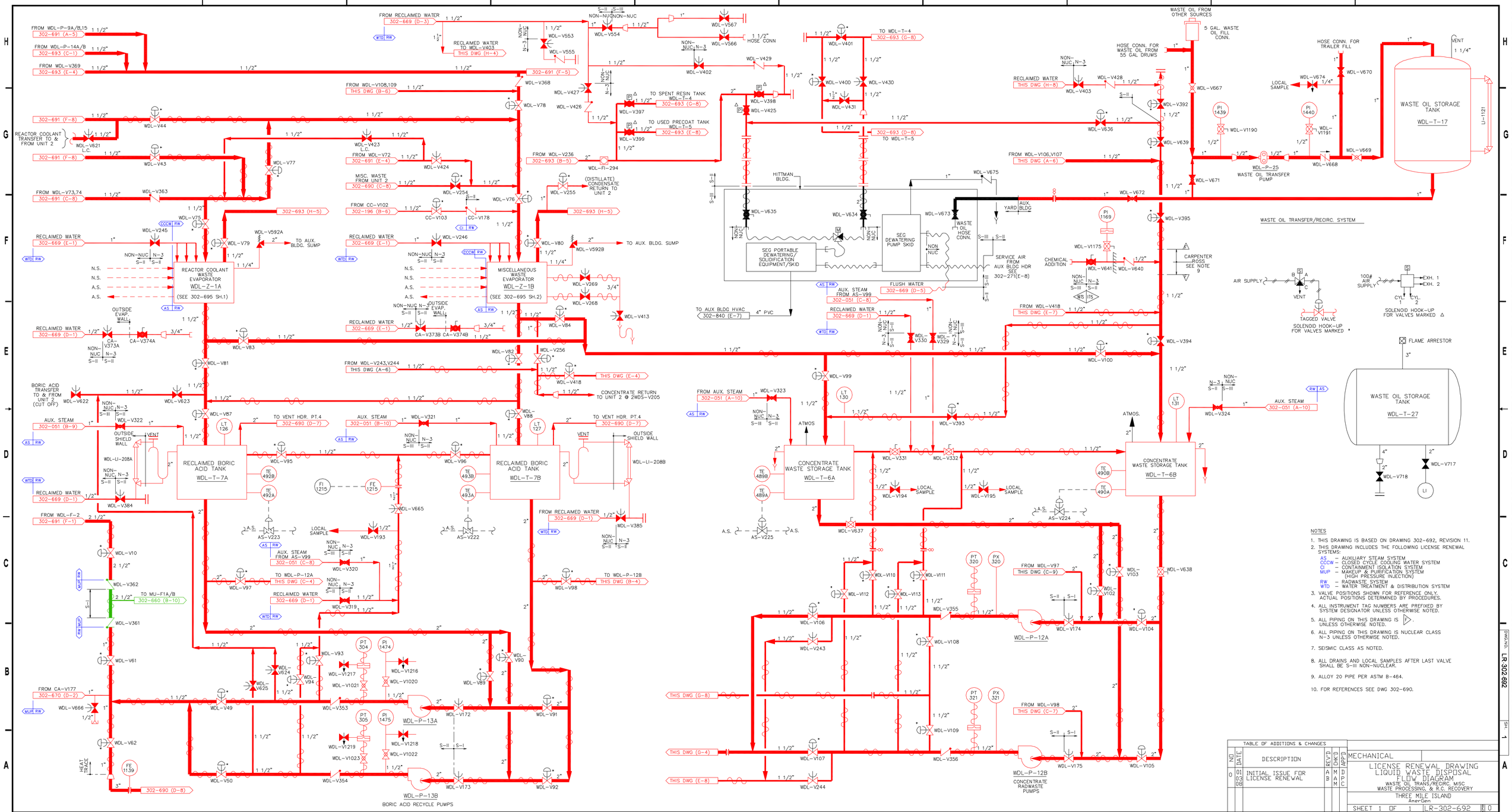

NOTES

1. THIS DRAWING IS BASED ON DRAWING 302-692, REVISION 11.
2. THIS DRAWING INCLUDES THE FOLLOWING LICENSE RENEWAL SYSTEMS:
   - AS – AUXILIARY STEAM SYSTEM
   - CCCW – CLOSED CYCLE COOLING WATER SYSTEM
   - CI – CONTAINMENT ISOLATION SYSTEM
   - MUP – MAKEUP & PURIFICATION SYSTEM (HIGH PRESSURE INJECTION)
   - RW – RADWASTE SYSTEM
   - WTD – WATER TREATMENT & DISTRIBUTION SYSTEM
3. VALVE POSITIONS SHOWN FOR REFERENCE ONLY. ACTUAL POSITIONS DETERMINED BY PROCEDURES.
4. ALL INSTRUMENT TAG NUMBERS ARE PREFIXED BY SYSTEM DESIGNATOR UNLESS OTHERWISE NOTED.
5. ALL PIPING ON THIS DRAWING IS ▷ UNLESS OTHERWISE NOTED.
6. ALL PIPING ON THIS DRAWING IS NUCLEAR CLASS N-3 UNLESS OTHERWISE NOTED.
7. SEISMIC CLASS AS NOTED.
8. ALL DRAINS AND LOCAL SAMPLES AFTER LAST VALVE SHALL BE S-III NON-NUCLEAR.
9. ALLOY 20 PIPE PER ASTM B-464.
10. FOR REFERENCES SEE DWG 302-690.

TABLE OF ADDITIONS & CHANGES

NO	DATE	DESCRIPTION	REV'D	CHK'D	APP'D
0	01 03 08	INITIAL ISSUE FOR LICENSE RENEWAL	A B	M A M	D A C

MECHANICAL

LICENSE RENEWAL DRAWING
LIQUID WASTE DISPOSAL
FLOW DIAGRAM
WASTE OIL TRANS/RECIRC. MISC
WASTE PROCESSING, & R.C. RECOVERY

THREE MILE ISLAND
AmerGen

SHEET 1 OF 1 LR-302-692 REV 0

DWG NO. LR-302-692 SH. 1

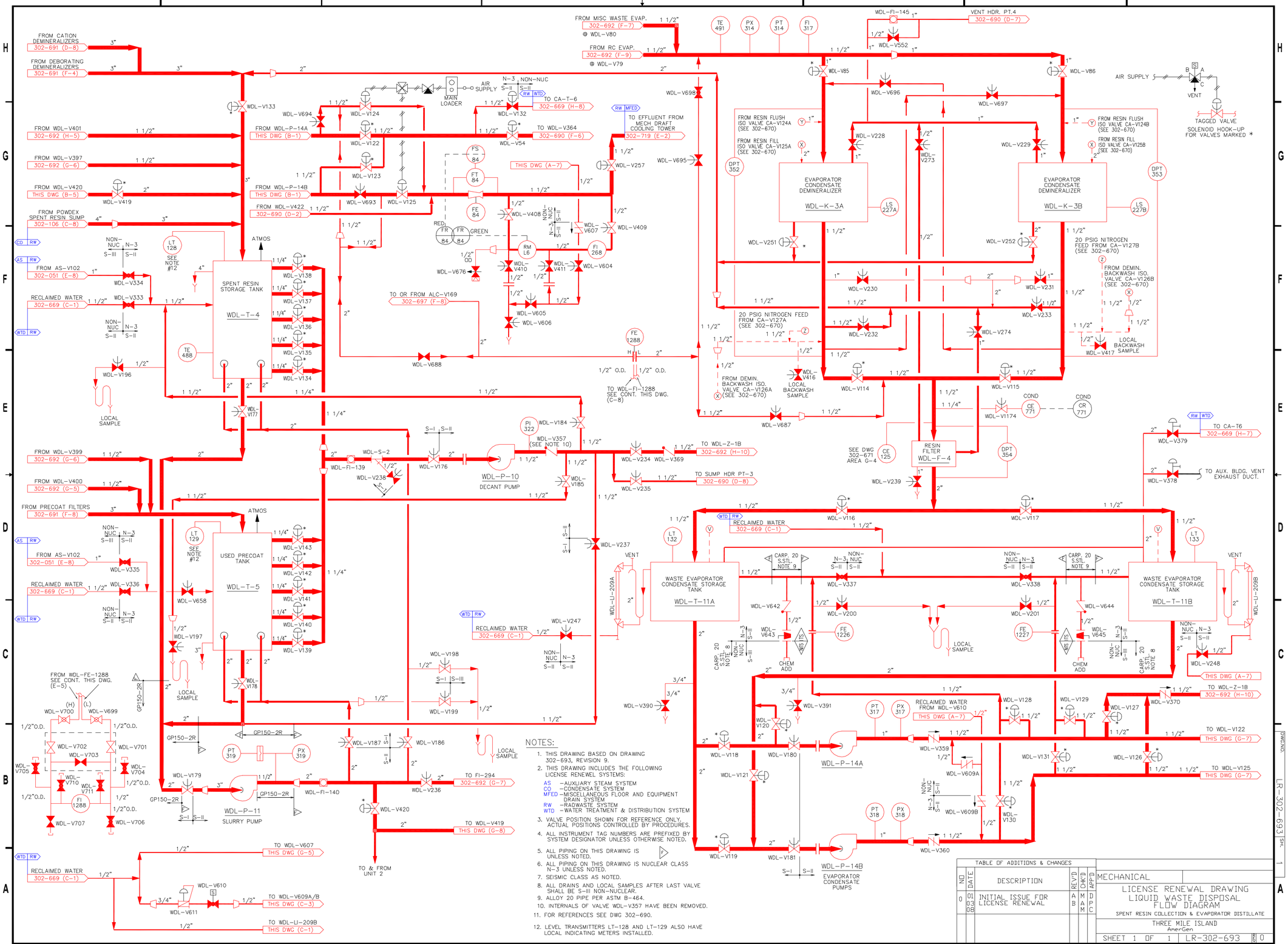

NOTES:

1. THIS DRAWING BASED ON DRAWING 302-693, REVISION 9.
2. THIS DRAWING INCLUDES THE FOLLOWING LICENSE RENEWEL SYSTEMS:
   AS –AUXILIARY STEAM SYSTEM
   CO –CONDENSATE SYSTEM
   MFED –MISCELLANEOUS FLOOR AND EQUIPMENT DRAIN SYSTEM
   RW –RADWASTE SYSTEM
   WTD –WATER TREATMENT & DISTRIBUTION SYSTEM
3. VALVE POSITION SHOWN FOR REFERENCE ONLY. ACTUAL POSITIONS CONTROLLED BY PROCEDURES.
4. ALL INSTRUMENT TAG NUMBERS ARE PREFIXED BY SYSTEM DESIGNATOR UNLESS OTHERWISE NOTED.
5. ALL PIPING ON THIS DRAWING IS UNLESS NOTED.
6. ALL PIPING ON THIS DRAWING IS NUCLEAR CLASS N-3 UNLESS NOTED.
7. SEISMIC CLASS AS NOTED.
8. ALL DRAINS AND LOCAL SAMPLES AFTER LAST VALVE SHALL BE S-III NON-NUCLEAR.
9. ALLOY 20 PIPE PER ASTM B-464.
10. INTERNALS OF VALVE WDL-V357 HAVE BEEN REMOVED.
11. FOR REFERENCES SEE DWG 302-690.
12. LEVEL TRANSMITTERS LT-128 AND LT-129 ALSO HAVE LOCAL INDICATING METERS INSTALLED.

TABLE OF ADDITIONS & CHANGES

NO	DATE	DESCRIPTION	REV'D	CHK'D	APP'D
0	01 03 08	INITIAL ISSUE FOR LICENSE RENEWAL	A B	M A M	D P C

MECHANICAL

LICENSE RENEWAL DRAWING
LIQUID WASTE DISPOSAL
FLOW DIAGRAM
SPENT RESIN COLLECTION & EVAPORATOR DISTILLATE

THREE MILE ISLAND
AmerGen

SHEET 1 OF 1 | LR-302-693 | REV 0

DWG.NO. LR-302-693 SH. 1

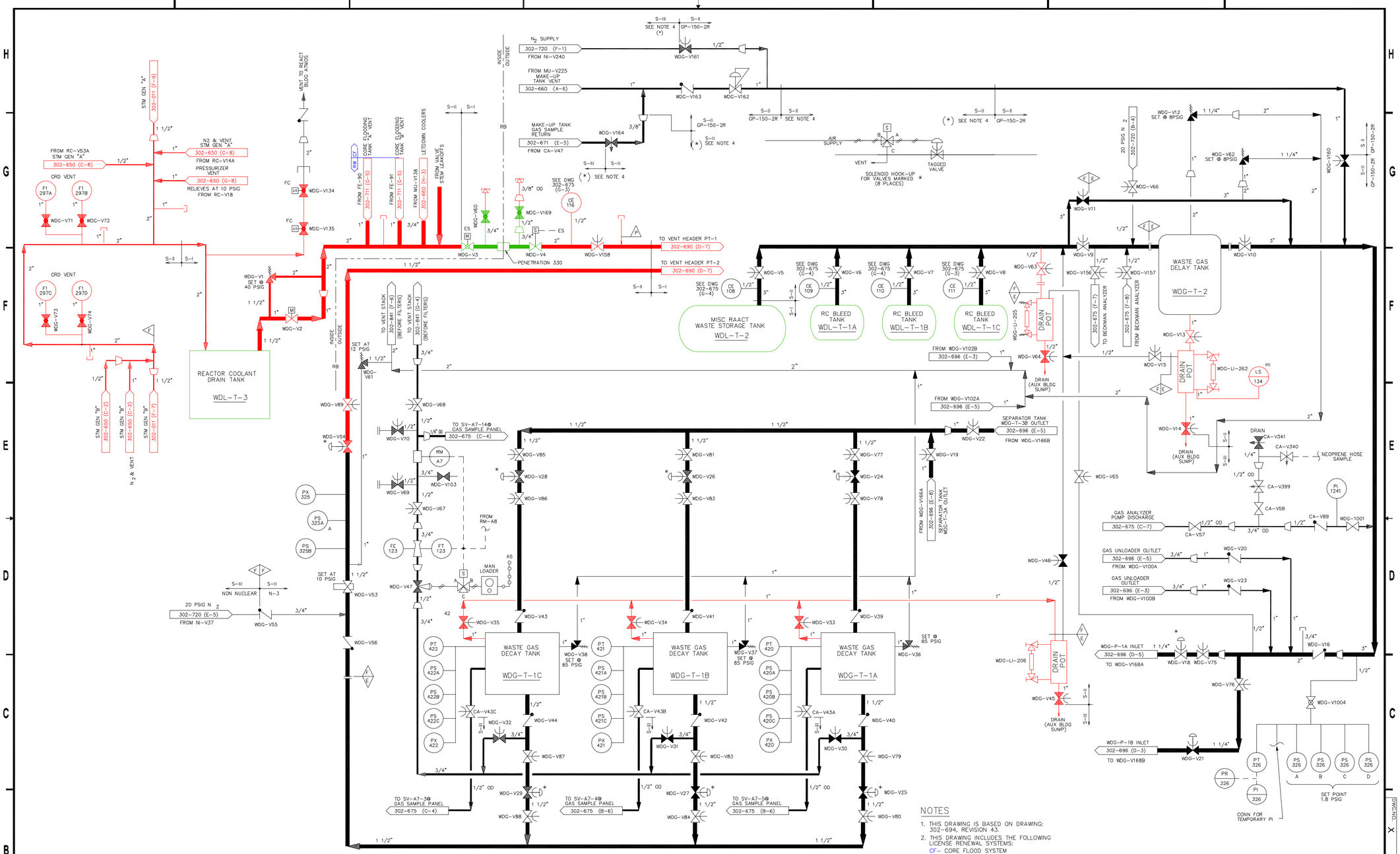

NOTES

1. THIS DRAWING IS BASED ON DRAWING: 302-694, REVISION 43.
2. THIS DRAWING INCLUDES THE FOLLOWING LICENSE RENEWAL SYSTEMS:
   CF- CORE FLOOD SYSTEM
   RW- RADWASTE SYSTEM
3. VALVE POSITIONS SHOWN FOR REFERENCE ONLY. ACTUAL POSITIONS CONTROLLED BY PROCEDURES.
4. ALL INSTRUMENT TAG NUMBERS ARE PREFIXED BY SYSTEM DESIGNATOR UNLESS OTHERWISE NOTED.
5. ALL PIPING ON THIS DRAWING IS NUCLEAR CLASS N3 UNLESS NOTED.
6. ALL DRAINS AFTER LAST VALVE SHALL BE S-111 NON NUCLEAR.
7. SEISMIC CLASS AS NOTED.
8. (*) STAINLESS STEEL TUBING, A213 TP304.

TABLE OF ADDITIONS & CHANGES

NO	DATE	DESCRIPTION	REV'D	CHK'D	APP'D
0	01 03 08	INITIAL ISSUE FOR LICENSE RENEWAL	A B	M A M	D P C

MECHANICAL

LICENSE RENEWAL DRAWING
WASTE GAS SYSTEM
FLOW DIAGRAM

THREE MILE ISLAND
AmerGen

SHEET 1 OF 1 LR-302-694 REV 0

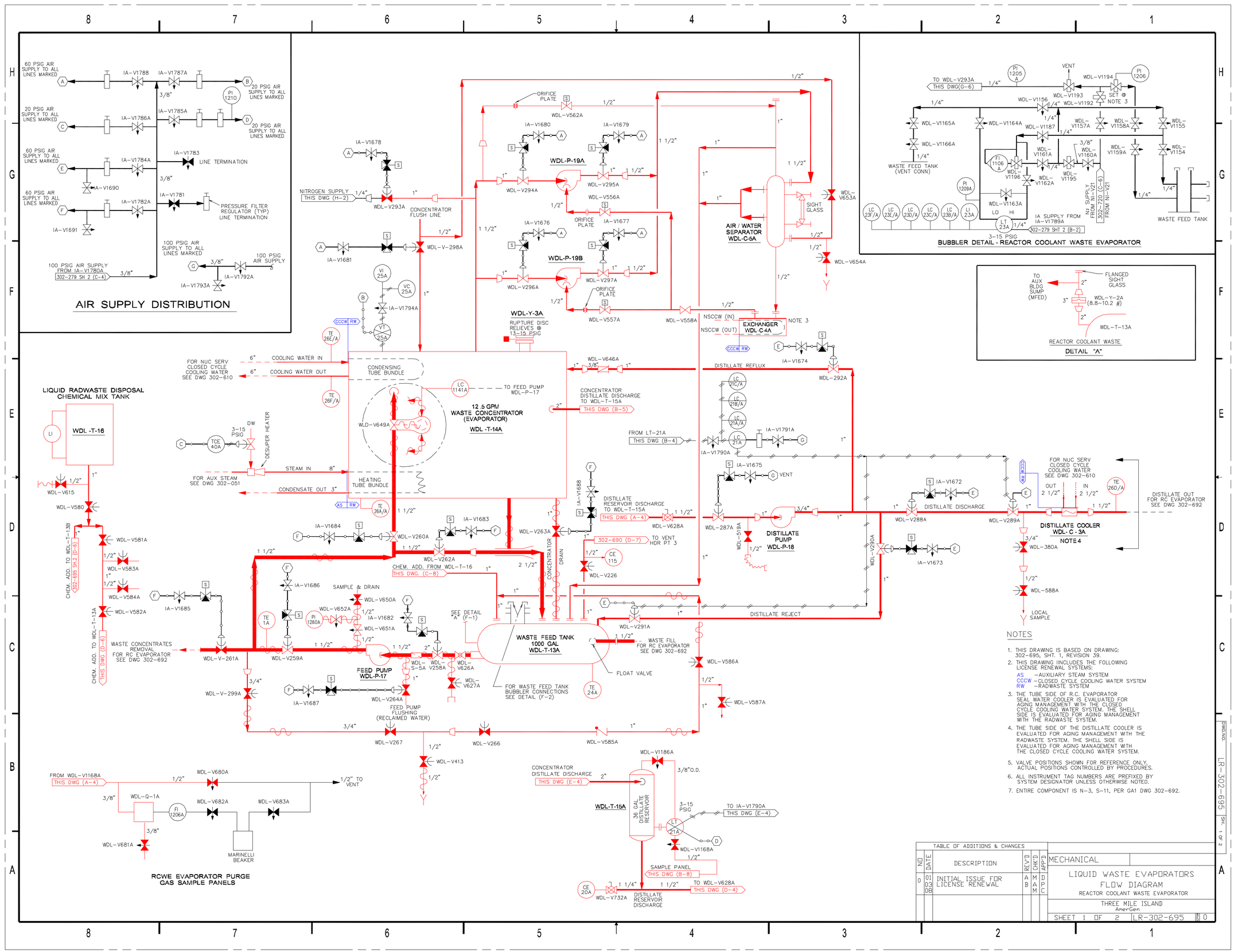

NOTES

1. THIS DRAWING IS BASED ON DRAWING: 302-695, SHT. 1, REVISION 39.
2. THIS DRAWING INCLUDES THE FOLLOWING LICENSE RENEWAL SYSTEMS:
   AS –AUXILIARY STEAM SYSTEM
   CCCW –CLOSED CYCLE COOLING WATER SYSTEM
   RW –RADWASTE SYSTEM
3. THE TUBE SIDE OF R.C. EVAPORATOR SEAL WATER COOLER IS EVALUATED FOR AGING MANAGEMENT WITH THE CLOSED CYCLE COOLING WATER SYSTEM. THE SHELL SIDE IS EVALUATED FOR AGING MANAGEMENT WITH THE RADWASTE SYSTEM.
4. THE TUBE SIDE OF THE DISTILLATE COOLER IS EVALUATED FOR AGING MANAGEMENT WITH THE RADWASTE SYSTEM. THE SHELL SIDE IS EVALUATED FOR AGING MANAGEMENT WITH THE CLOSED CYCLE COOLING WATER SYSTEM.
5. VALVE POSITIONS SHOWN FOR REFERENCE ONLY. ACTUAL POSITIONS CONTROLLED BY PROCEDURES.
6. ALL INSTRUMENT TAG NUMBERS ARE PREFIXED BY SYSTEM DESIGNATOR UNLESS OTHERWISE NOTED.
7. ENTIRE COMPONENT IS N-3, S-11, PER GA1 DWG 302-692.

TABLE OF ADDITIONS & CHANGES

NO	DATE	DESCRIPTION	REV'D	CHK'D	APP'D
0	01 03 08	INITIAL ISSUE FOR LICENSE RENEWAL	A B	M A M	D P C

MECHANICAL

LIQUID WASTE EVAPORATORS FLOW DIAGRAM

REACTOR COOLANT WASTE EVAPORATOR

THREE MILE ISLAND AmerGen

SHEET 1 OF 2 | LR-302-695 | REV 0

DWG NO. LR-302-695 SHT. 1 OF 2

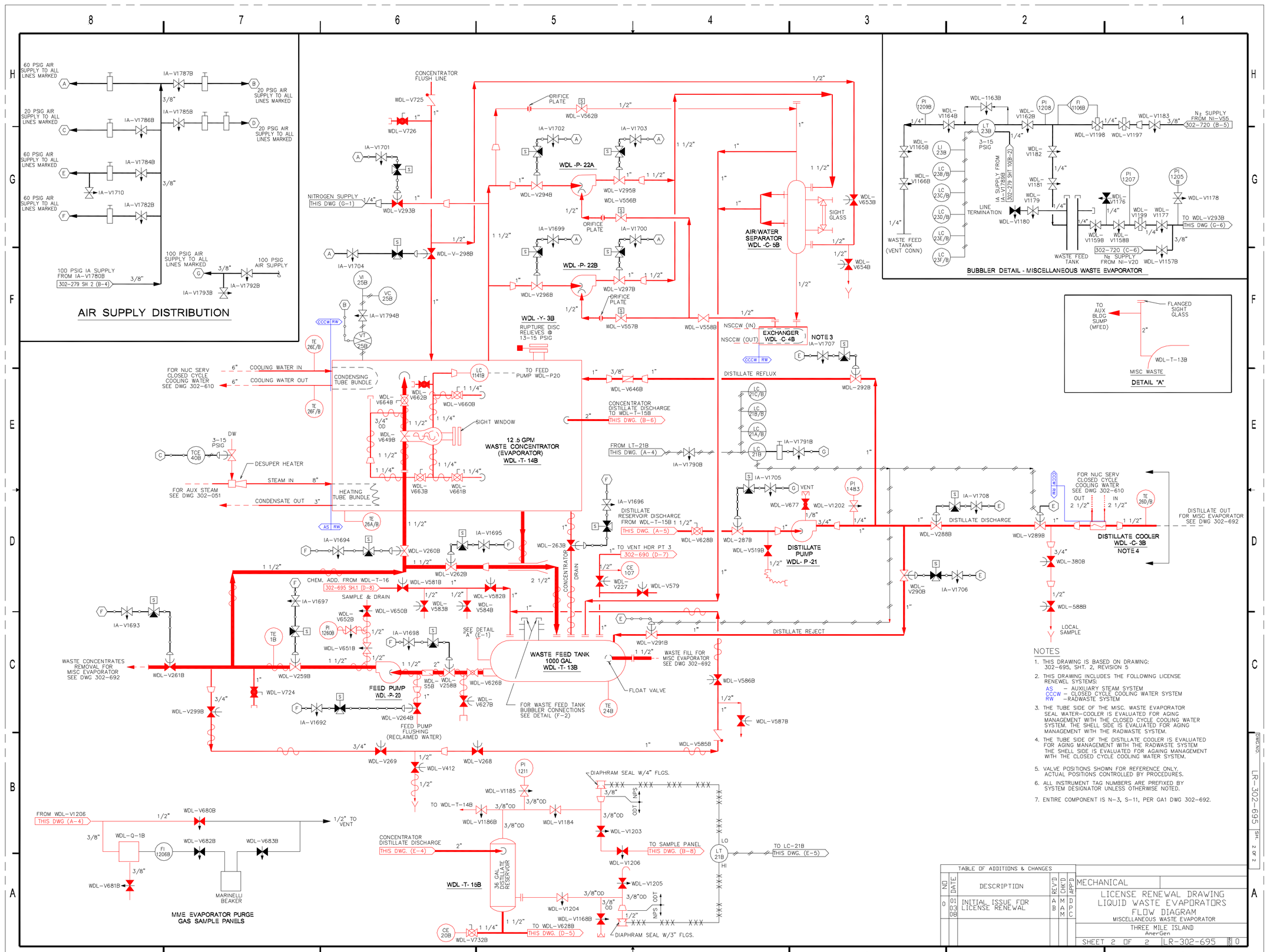

NOTES

1. THIS DRAWING IS BASED ON DRAWING: 302-695, SHT. 2, REVISION 5
2. THIS DRAWING INCLUDES THE FOLLOWING LICENSE RENEWEL SYSTEMS:
   AS – AUXILIARY STEAM SYSTEM
   CCCW – CLOSED CYCLE COOLING WATER SYSTEM
   RW – RADWASTE SYSTEM
3. THE TUBE SIDE OF THE MISC. WASTE EVAPORATOR SEAL WATER-COOLER IS EVALUATED FOR AGING MANAGEMENT WITH THE CLOSED CYCLE COOLING WATER SYSTEM. THE SHELL SIDE IS EVALUATED FOR AGING MANAGEMENT WITH THE RADWASTE SYSTEM.
4. THE TUBE SIDE OF THE DISTILLATE COOLER IS EVALUATED FOR AGING MANAGEMENT WITH THE RADWASTE SYSTEM THE SHELL SIDE IS EVALUATED FOR AGAING MANAGEMENT WITH THE CLOSED CYCLE COOLING WATER SYSTEM.
5. VALVE POSITIONS SHOWN FOR REFERENCE ONLY. ACTUAL POSITIONS CONTROLLED BY PROCEDURES.
6. ALL INSTRUMENT TAG NUMBERS ARE PREFIXED BY SYSTEM DESIGNATOR UNLESS OTHERWISE NOTED.
7. ENTIRE COMPONENT IS N-3, S-11, PER GA1 DWG 302-692.

TABLE OF ADDITIONS & CHANGES

NO	DATE	DESCRIPTION	REV'D	CHK'D	APP'D
0	01 03 08	INITIAL ISSUE FOR LICENSE RENEWAL	A B	M A M	D T C

MECHANICAL

LICENSE RENEWAL DRAWING
LIQUID WASTE EVAPORATORS
FLOW DIAGRAM
MISCELLANEOUS WASTE EVAPORATOR

THREE MILE ISLAND
AmerGen

SHEET 2 OF 2 LR-302-695 0

DWG.NO. LR-302-695 SH. 2 OF 2

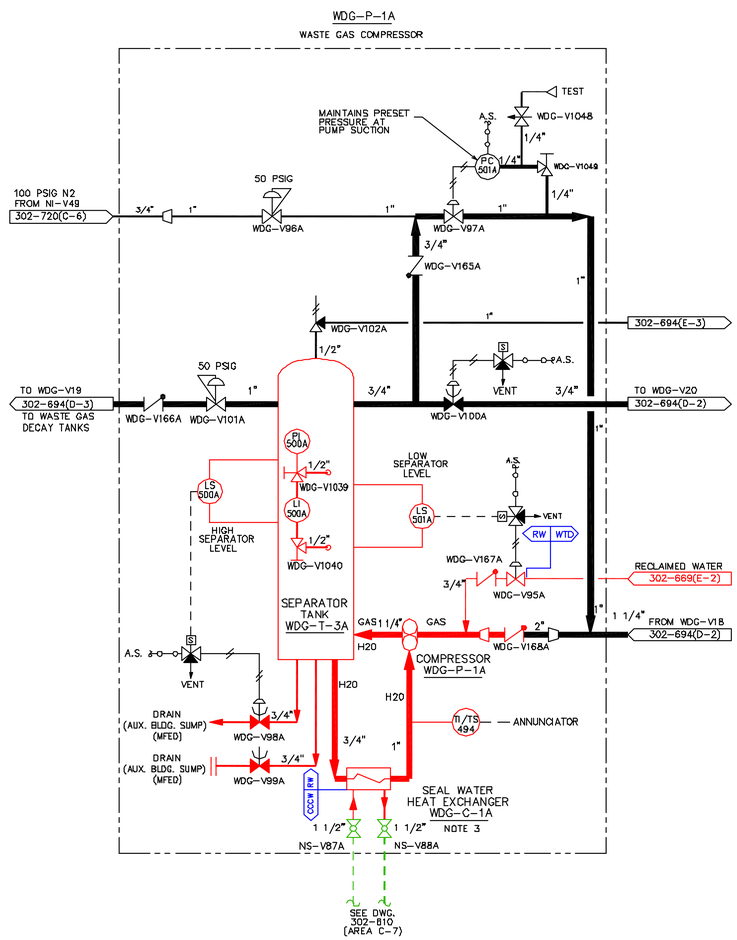

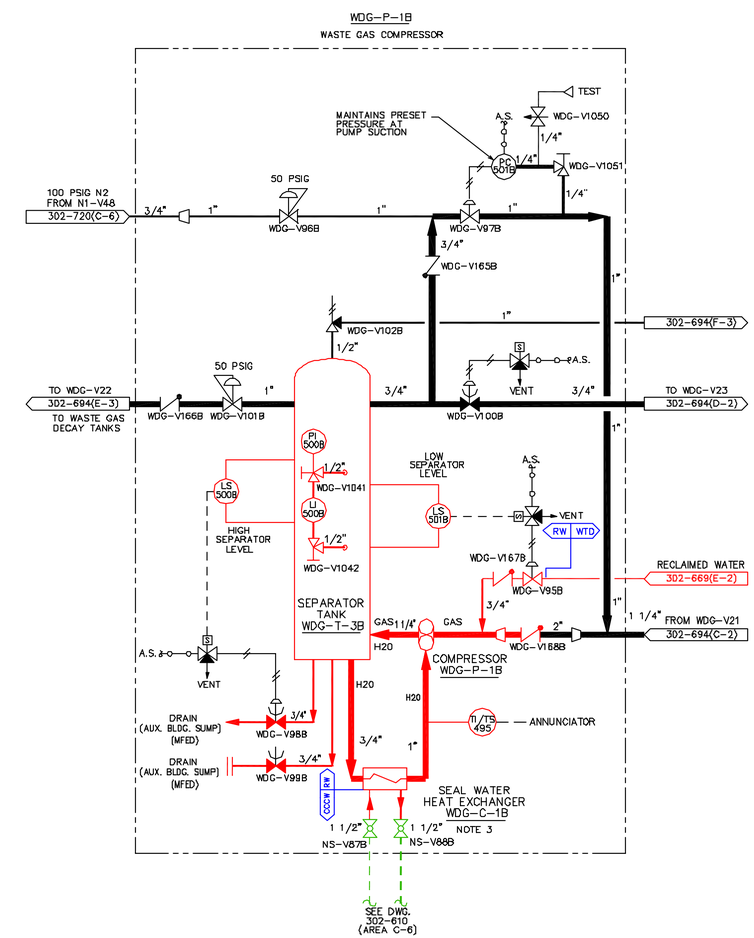

NOTES

1. THIS DRAWING IS BASED ON DRAWING: 302-696, REVISION 2.
2. THIS DRAWING INCLUDES THE FOLLOWING LICENSE RENEWAL SYSTEMS:
   CCCW –CLOSED CYCLE COOLING WATER SYSTEM
   RW –RADWASTE SYSTEM
   WTD –WATER TREATMENT & DISTRIBUTION SYSTEM
3. THE TUBE SIDE OF THE SEAL WATER HEAT EXCHANGER IS EVALUATED FOR AGING MANAGEMENT WITH THE RADWASTE SYSTEM. THE SHELL SIDE IS EVALUATED FOR AGING MANAGEMENT WITH THE CLOSED CYCLE COOLING SYSTEM.
4. VALVE POSITIONS SHOWN FOR REFERENCE ONLY. ACTUAL POSITIONS CONTROLLED BY PROCEDURES.
5. ALL INSTRUMENT TAG NUMBERS ARE PREFIXED BY SYSTEM DESIGNATOR UNLESS OTHERWISE NOTED.
6. ENTIRE COMPONENT IS N-3, S-II.
7. ALL DRAINS AFTER LAST VALVE SHALL BE S-III NON-NUCLEAR.

TABLE OF ADDITIONS & CHANGES

NO	DATE	DESCRIPTION	REV'D	CHK'D	APP'D
0	01 03 08	INITIAL ISSUE FOR LICENSE RENEWAL	A B	M A M	D P C D

MECHANICAL

WASTE GAS COMPRESSORS FLOW DIAGRAM

THREE MILE ISLAND
AmerGen

SHEET 1 OF 1 | LR-302-696 | REV 0

DWG NO. LR-302-696 | SH. N/A

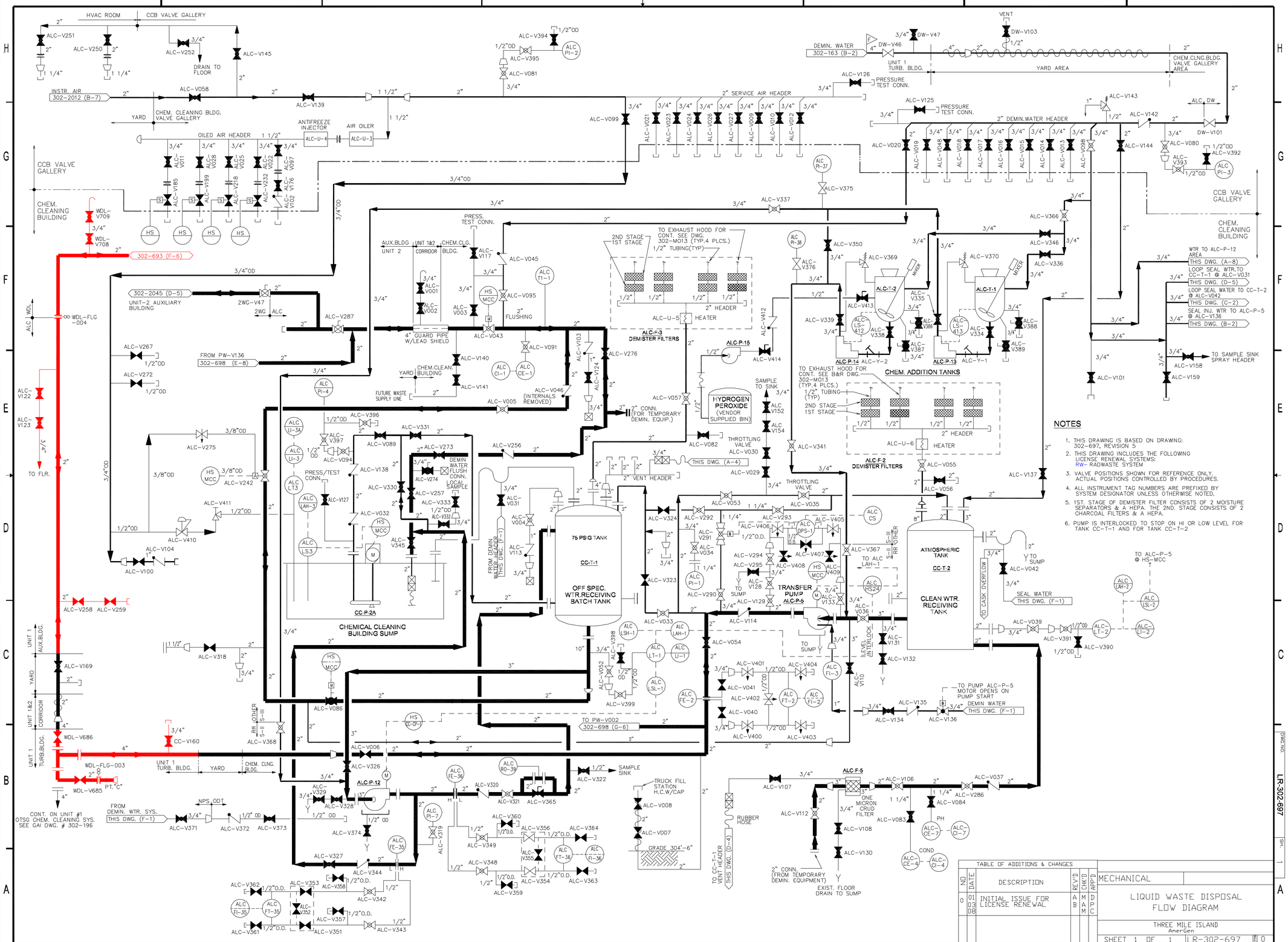

NOTES

1. THIS DRAWING IS BASED ON DRAWING: 302-697, REVISION 5
2. THIS DRAWING INCLUDES THE FOLLOWING LICENSE RENEWAL SYSTEMS: RW- RADWASTE SYSTEM
3. VALVE POSITIONS SHOWN FOR REFERENCE ONLY. ACTUAL POSITIONS CONTROLLED BY PROCEDURES.
4. ALL INSTRUMENT TAG NUMBERS ARE PREFIXED BY SYSTEM DESIGNATOR UNLESS OTHERWISE NOTED.
5. 1ST. STAGE OF DEMISTER FILTER CONSISTS OF 2 MOISTURE SEPARATORS & A HEPA. THE 2ND. STAGE CONSISTS OF 2 CHARCOAL FILTERS & A HEPA.
6. PUMP IS INTERLOCKED TO STOP ON HI OR LOW LEVEL FOR TANK CC-T-1 AND FOR TANK CC-T-2

TABLE OF ADDITIONS & CHANGES

NO	DATE	DESCRIPTION	REV'D	CHK'D	APP'D
0	01 03 88	INITIAL ISSUE FOR LICENSE RENEWAL	A B	M A M	D P C

MECHANICAL

LIQUID WASTE DISPOSAL FLOW DIAGRAM

THREE MILE ISLAND
AmerGen

SHEET 1 OF 1 LR-302-697 REV 0

DWG. NO. LR-302-697 SH. 1

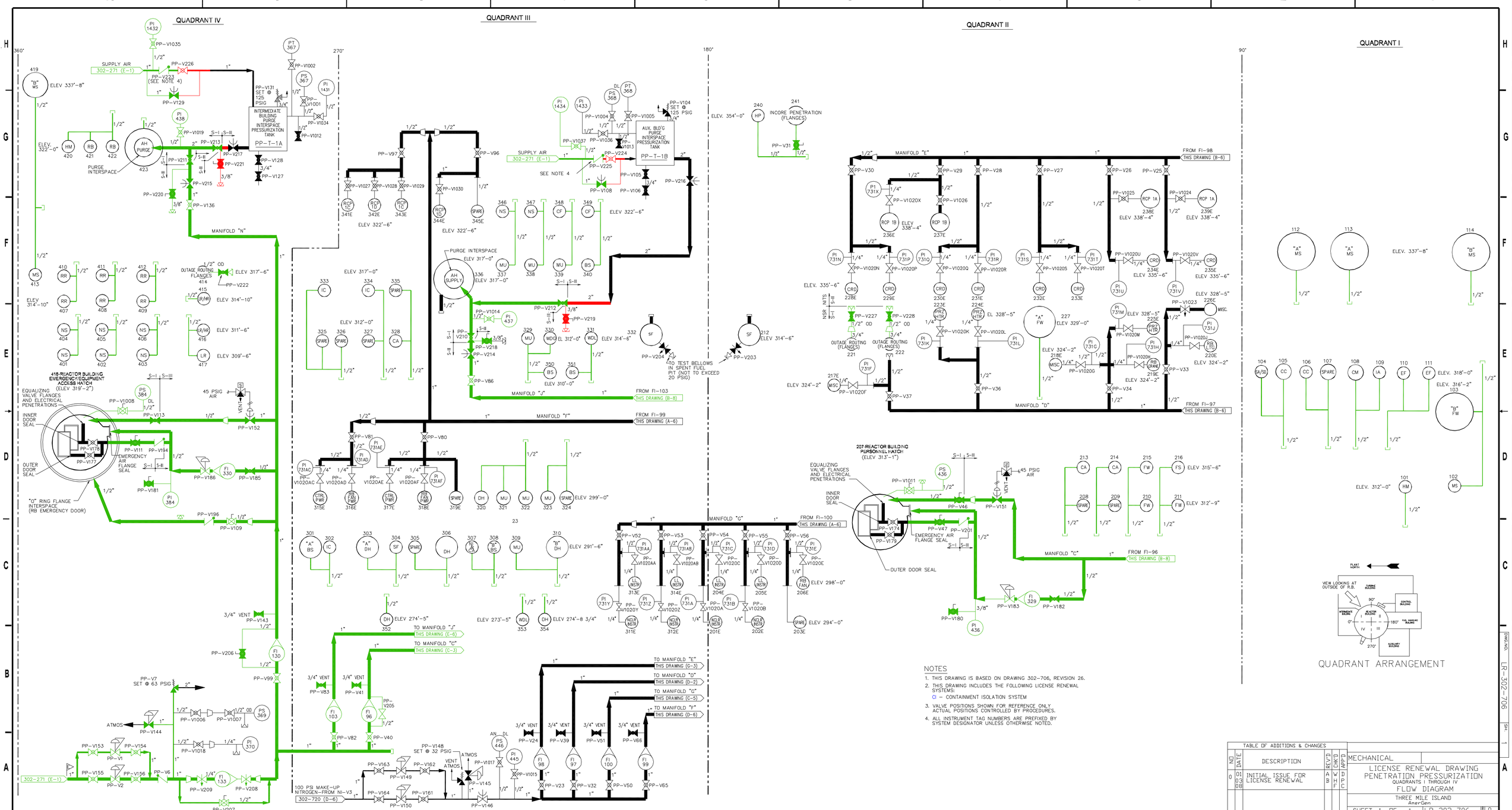

NOTES

1. THIS DRAWING IS BASED ON DRAWING 302-706, REVISION 26.
2. THIS DRAWING INCLUDES THE FOLLOWING LICENSE RENEWAL SYSTEMS:
   CI – CONTAINMENT ISOLATION SYSTEM
3. VALVE POSITIONS SHOWN FOR REFERENCE ONLY ACTUAL POSITIONS CONTROLLED BY PROCEDURES.
4. ALL INSTRUMENT TAG NUMBERS ARE PREFIXED BY SYSTEM DESIGNATOR UNLESS OTHERWISE NOTED.

TABLE OF ADDITIONS & CHANGES

NO	DATE	DESCRIPTION	REV'D	CHK'D	APP'D
0	01 03 08	INITIAL ISSUE FOR LICENSE RENEWAL	A B	W H T	D P C

MECHANICAL

LICENSE RENEWAL DRAWING
PENETRATION PRESSURIZATION
QUADRANTS I THROUGH IV
FLOW DIAGRAM

THREE MILE ISLAND
AmerGen

SHEET 1 OF 1 LR-302-706 REV 0

DWG NO. LR-302-706 SH. 1

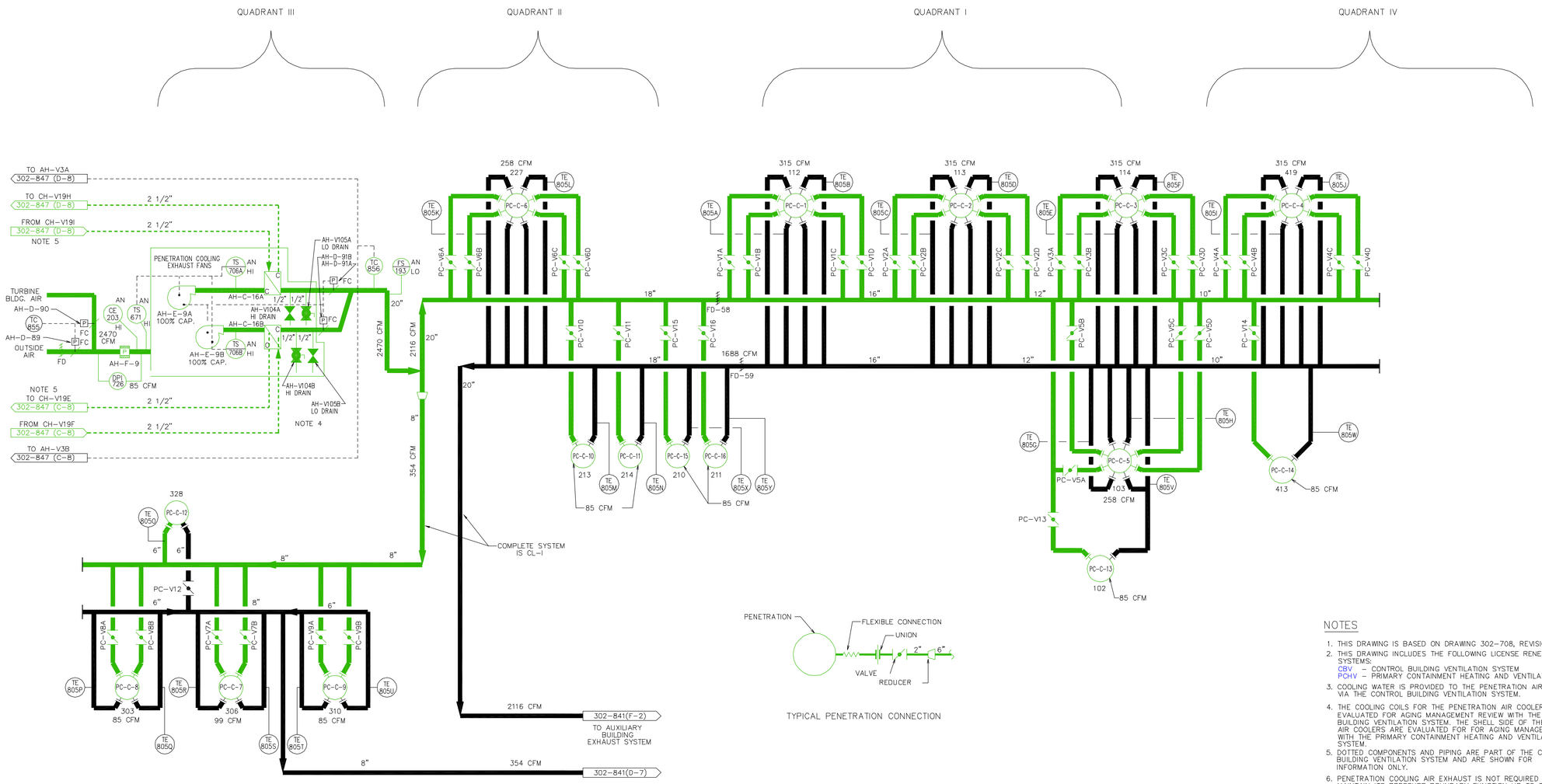

NOTES

1. THIS DRAWING IS BASED ON DRAWING 302-708, REVISION 22.
2. THIS DRAWING INCLUDES THE FOLLOWING LICENSE RENEWAL SYSTEMS:
   CBV – CONTROL BUILDING VENTILATION SYSTEM
   PCHV – PRIMARY CONTAINMENT HEATING AND VENTILATION SYSTEM
3. COOLING WATER IS PROVIDED TO THE PENETRATION AIR COOLERS VIA THE CONTROL BUILDING VENTILATION SYSTEM.
4. THE COOLING COILS FOR THE PENETRATION AIR COOLERS ARE EVALUATED FOR AGING MANAGEMENT REVIEW WITH THE CONTROL BUILDING VENTILATION SYSTEM. THE SHELL SIDE OF THE PENETRATION AIR COOLERS ARE EVALUATED FOR FOR AGING MANAGEMENT REVIEW WITH THE PRIMARY CONTAINMENT HEATING AND VENTILATION SYSTEM.
5. DOTTED COMPONENTS AND PIPING ARE PART OF THE CONTROL BUILDING VENTILATION SYSTEM AND ARE SHOWN FOR INFORMATION ONLY.
6. PENETRATION COOLING AIR EXHAUST IS NOT REQUIRED TO MAINTAIN ITS PRESSURE BOUNDARY FUNCTION UP TO THE AUXILIARY BUILDING VENT. EXHAUST CAN BE VENTED VIA THE PENETRATION COOLING EXHAUST DUCTWORK OR THE INDIVIDUAL ROOMS EXHAUST DUCTWORK INTHE AUXILIARY AND FUEL HANDLING BUILDINGS.
7. VALVE POSITIONS SHOWN FOR REFERENCE ONLY. ACTUAL POSITIONS CONTROLLED BY PROCEDURES.
8. ALL INSTRUMENT TAG NUMBERS ARE PREFIXED BY AH.
9. ALL BRANCH CONNECTIONS OFF MAIN ARE 6".
10. ALL BRANCH CONNECTIONS REDUCE TO 2" BETWEEN VALVE AND MAIN.
11. ALL BRANCHES HAVE FLEXIBLE CONNECTONS BETWEEN PENETRATIONS AND VALVES.
12. ALL TE'S REQUIRE 1/2" NPT MOUNTING HOLE AND TO BE CONNECTED TO TR 805.

TABLE OF ADDITIONS & CHANGES

NO	DATE	DESCRIPTION	REV'D	CHK'D	APP'D
0	01 03 08	INITIAL ISSUE FOR LICENSE RENEWAL	TW	WHF	DPC

MECHANICAL

LICENSE RENEWAL DRAWING
PENETRATION COOLING
FLOW DIAGRAM

THREE MILE ISLAND
AmerGen

SHEET 1 OF 1 | LR-302-708 | REV 0

DWG NO. LR-302-708 SH. 1

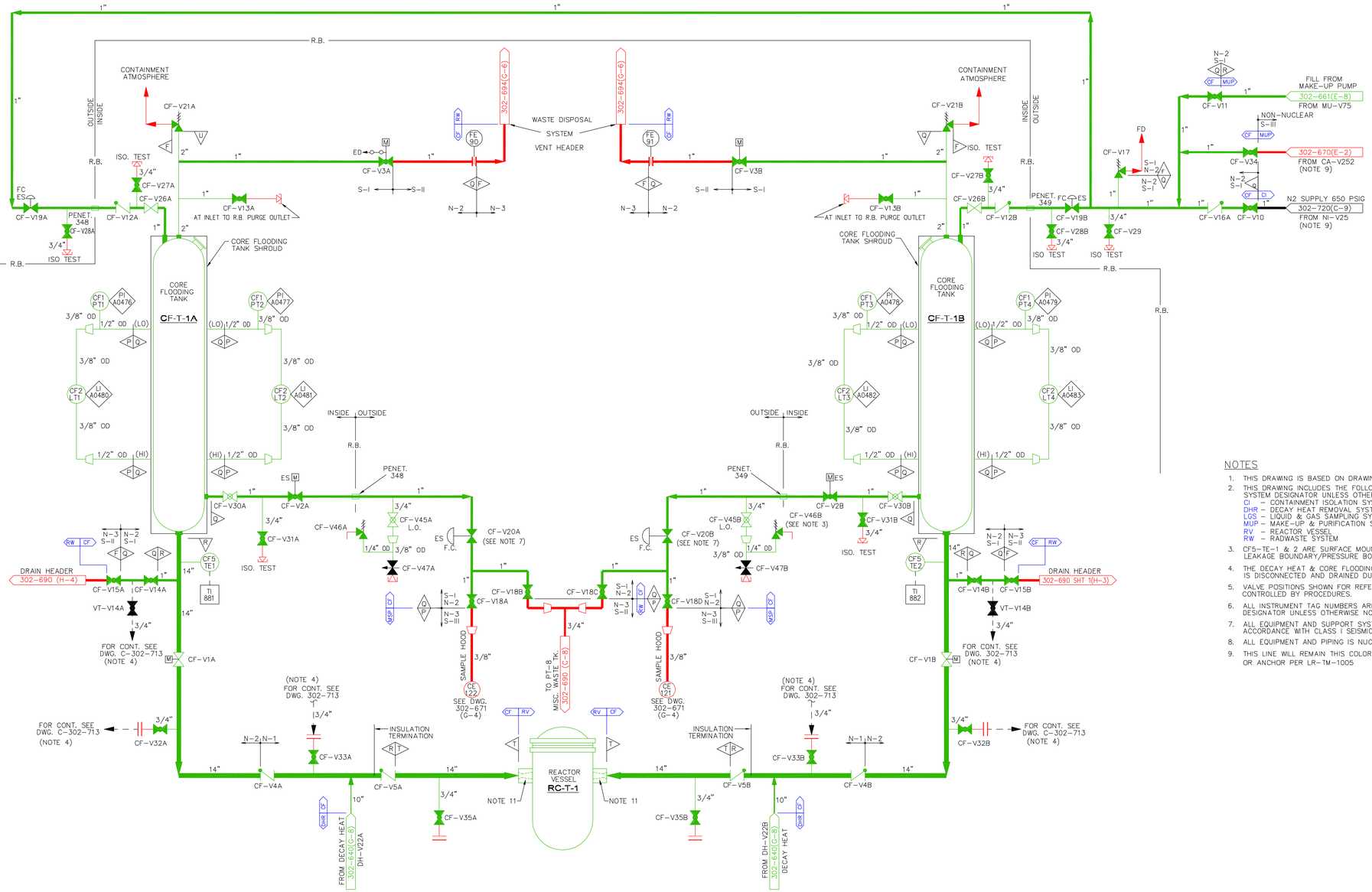

NOTES

1. THIS DRAWING IS BASED ON DRAWING: 302-711 REVISION 28
2. THIS DRAWING INCLUDES THE FOLLOWING LICENSE RENEWAL SYSTEMS: SYSTEM DESIGNATOR UNLESS OTHERWISE NOTED.
   CI – CONTAINMENT ISOLATION SYSTEM
   DHR – DECAY HEAT REMOVAL SYSTEM
   LGS – LIQUID & GAS SAMPLING SYSTEM
   MUP – MAKE-UP & PURIFICATION SYSTEM
   RV – REACTOR VESSEL
   RW – RADWASTE SYSTEM
3. CFS-TE-1 & 2 ARE SURFACE MOUNTED AND DO NOT PERFORM A LEAKAGE BOUNDARY/PRESSURE BOUNDARY INTENDED FUNCTION.
4. THE DECAY HEAT & CORE FLOODING CHECK VALVE TESTING SYSTEM IS DISCONNECTED AND DRAINED DURING OPERATION.
5. VALVE POSITIONS SHOWN FOR REFERENCE ONLY. ACTUAL POSITIONS CONTROLLED BY PROCEDURES.
6. ALL INSTRUMENT TAG NUMBERS ARE PREFIXED BY SYSTEM DESIGNATOR UNLESS OTHERWISE NOTED.
7. ALL EQUIPMENT AND SUPPORT SYSTEMS ARE DESIGNED IN ACCORDANCE WITH CLASS I SEISMIC UNLESS OTHERWISE NOTED.
8. ALL EQUIPMENT AND PIPING IS NUCLEAR CLASS AS NOTED.
9. THIS LINE WILL REMAIN THIS COLOR TO THE APPLICABLE HANGER OR ANCHOR PER LR-TM-1005

TABLE OF ADDITIONS & CHANGES

NO	DATE	DESCRIPTION	REV'D	CHK'D	APP'D
0	01 03 08	INITIAL ISSUE FOR LICENSE RENEWAL	A B	J M C	D P C

MECHANICAL

LICENSE RENEWAL DRAWING
CORE FLOODING
FLOW DIAGRAM

THREE MILE ISLAND
AmerGen

SHEET 1 OF 1 | LR-302-711 | REV 0

DWG. NO. LR-302-711 SH. 1

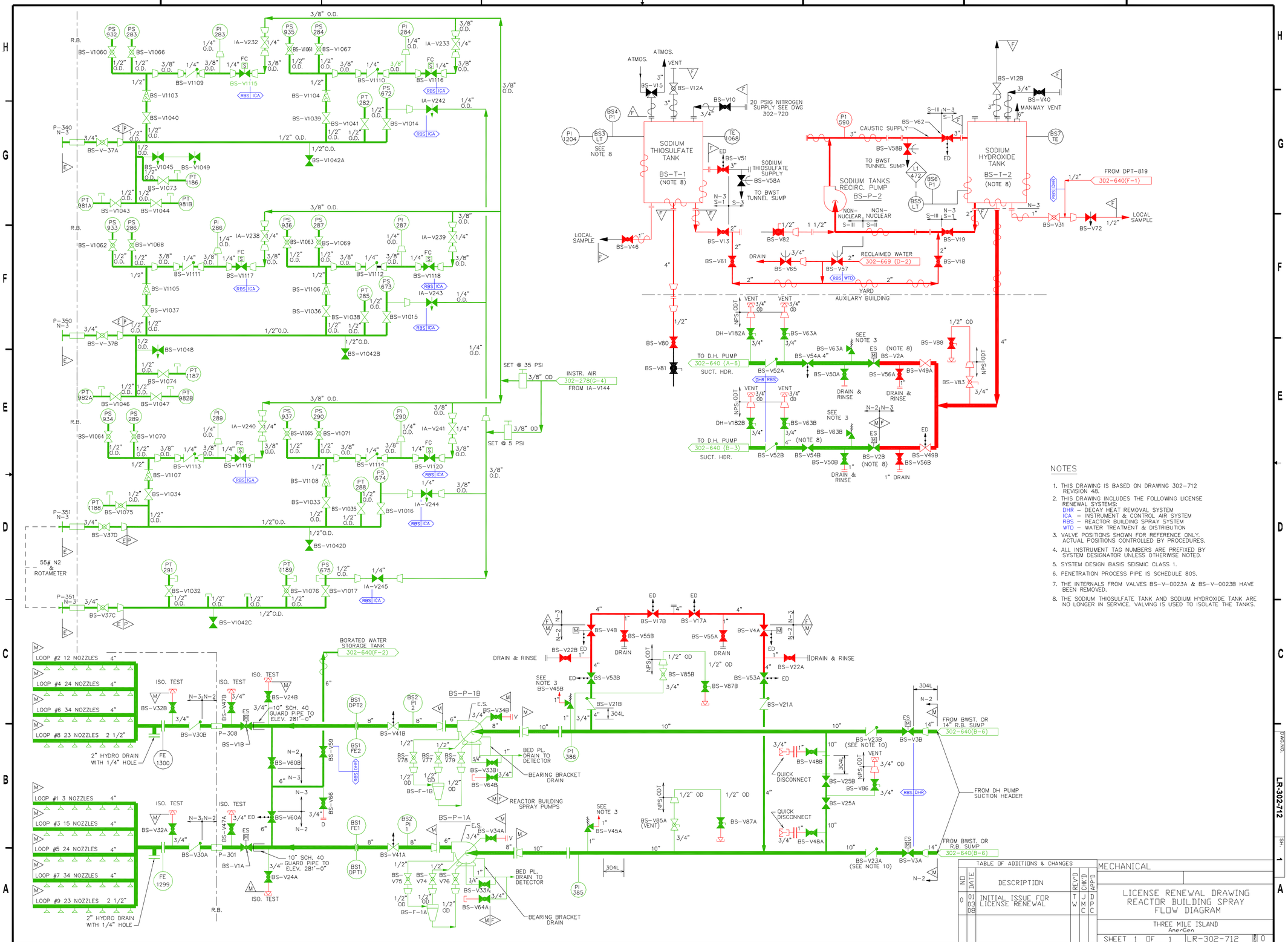

NOTES

1. THIS DRAWING IS BASED ON DRAWING 302-712 REVISION 48.
2. THIS DRAWING INCLUDES THE FOLLOWING LICENSE RENEWAL SYSTEMS:
   DHR – DECAY HEAT REMOVAL SYSTEM
   ICA – INSTRUMENT & CONTROL AIR SYSTEM
   RBS – REACTOR BUILDING SPRAY SYSTEM
   WTD – WATER TREATMENT & DISTRIBUTION
3. VALVE POSITIONS SHOWN FOR REFERENCE ONLY. ACTUAL POSITIONS CONTROLLED BY PROCEDURES.
4. ALL INSTRUMENT TAG NUMBERS ARE PREFIXED BY SYSTEM DESIGNATOR UNLESS OTHERWISE NOTED.
5. SYSTEM DESIGN BASIS SEISMIC CLASS 1.
6. PENETRATION PROCESS PIPE IS SCHEDULE 80S.
7. THE INTERNALS FROM VALVES BS-V-0023A & BS-V-0023B HAVE BEEN REMOVED.
8. THE SODIUM THIOSULFATE TANK AND SODIUM HYDROXIDE TANK ARE NO LONGER IN SERVICE. VALVING IS USED TO ISOLATE THE TANKS.

TABLE OF ADDITIONS & CHANGES

NO	DATE	DESCRIPTION	REV'D	CHK'D	APP'D
0	01 03 08	INITIAL ISSUE FOR LICENSE RENEWAL	TW	JMC	DPC

MECHANICAL

LICENSE RENEWAL DRAWING
REACTOR BUILDING SPRAY
FLOW DIAGRAM

THREE MILE ISLAND
AmerGen

SHEET 1 OF 1 | LR-302-712 | REV 0

DWG.NO. LR-302-712 SH. 1

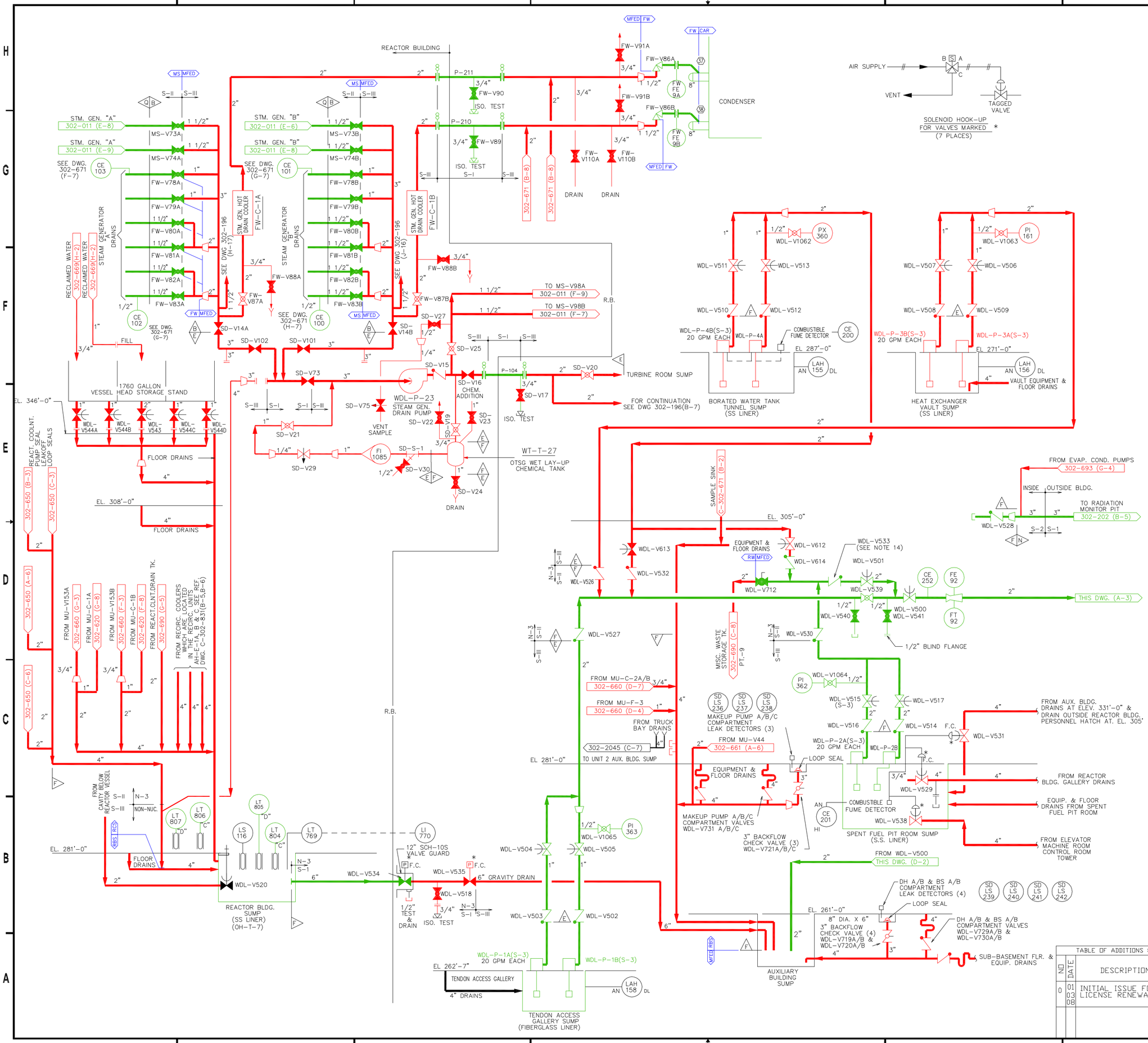

NOTES

1. THIS DRAWING IS BASED ON DRAWING 302-719, REVISION 58.
2. THIS DRAWING INCLUDES THE FOLLOWING LICENSE RENEWAL SYSTEMS:
   - DHR – DECAY HEAT REMOVAL SYSTEM
   - MUP – MAKEUP & PURIFICATION (HIGH PRESSURE) SYSTEM
   - MFED – MICELLANEOUS FLOOR & EQUIPMENT DRAINS SYSTEM
   - PCHV – PRIMARY CONTAINMENT HEATING & VENTILATING SYSTEM
   - RW – RADWASTE SYSTEM
   - RBS – REACTOR BUILDING SPRAY SYSTEM
   - RCS – REACTOR COOLANT SYSTEM
   - FW – FEEDWATER SYSTEM
   - MS – MAIN STEAM SYSTEM
   - LGS – LIQUID AND GAS SAMPLING SYSTEM
3. VALVE POSITIONS SHOWN FOR REFERENCE ONLY. ACTUAL POSITIONS CONTROLLED BY PROCEDURES.
4. ALL INSTRUMENT TAG NUMBERS ARE PREFIXED BY SYSTEM DESIGNATOR UNLESS OTHERWISE NOTED.
5. ALL EQUIPMENT DRAINS – 2 INCH, AND EXTEND 6" ABOVE FLOOR.
6. ALL LOCAL FLOOR DRAINS, ZURN MODEL Z-730-V-75, OIL.
7. ALL EMBEDDED PIPING SHOWN IS SEISMIC CLASS 111, UNLESS NOTED.

TABLE OF ADDITIONS & CHANGES

NO	DATE	DESCRIPTION	REV'D	CHK'D	APP'D
0	01 03 08	INITIAL ISSUE FOR LICENSE RENEWAL	TW	JMC	DPC

MECHANICAL

LICENSE RENEWAL DRAWING
SUMP PUMP & DRAINAGE SYSTEM
(REACTOR & AUXILIARY BUILDING)
FLOW DIAGRAM

THREE MILE ISLAND
AmerGen

SHEET 1 OF 1 | LR-302-719 | REV. 0

DWG.NO. LR-302-719 SH. 1

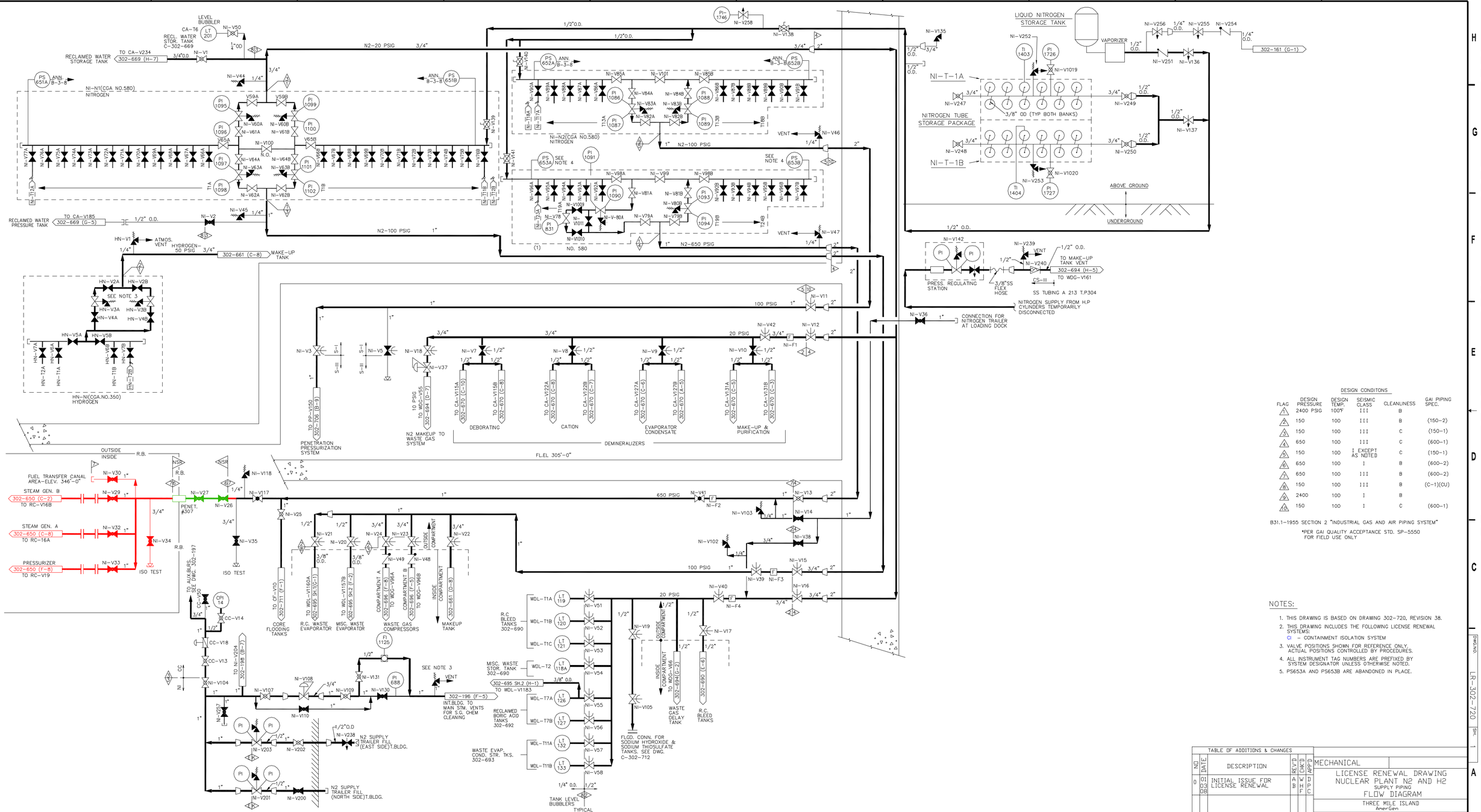

DESIGN CONDITONS

FLAG	DESIGN PRESSURE	DESIGN TEMP. 100°F	SEISMIC CLASS	CLEANLINESS	GAI PIPING SPEC.
1	2400 PSIG		III	B	
2	150	100	III	B	(150-2)
3	150	100	III	C	(150-1)
4	650	100	III	C	(600-1)
5	150	100	I EXCEPT AS NOTED	C	(150-1)
6	650	100	I	B	(600-2)
7	650	100	III	B	(600-2)
8	150	100	III	B	(C-1)(CU)
9	2400	100	I	B	
10	150	100	I	C	(600-1)

B31.1-1955 SECTION 2 "INDUSTRIAL GAS AND AIR PIPING SYSTEM"

*PER GAI QUALITY ACCEPTANCE STD. SP-5550 FOR FIELD USE ONLY

NOTES:

1. THIS DRAWING IS BASED ON DRAWING 302-720, REVISION 38.
2. THIS DRAWING INCLUDES THE FOLLOWING LICENSE RENEWAL SYSTEMS:
   CI - CONTAINMENT ISOLATION SYSTEM
3. VALVE POSITIONS SHOWN FOR REFERENCE ONLY. ACTUAL POSITIONS CONTROLLED BY PROCEDURES.
4. ALL INSTRUMENT TAG NUMBERS ARE PREFIXED BY SYSTEM DESIGNATOR UNLESS OTHERWISE NOTED.
5. PS653A AND PS653B ARE ABANDONED IN PLACE.

TABLE OF ADDITIONS & CHANGES

NO	DATE	DESCRIPTION	RCV'D	CHK'D	APP'D
0	01 03 80	INITIAL ISSUE FOR LICENSE RENEWAL	A B	W H F	D P C

MECHANICAL

LICENSE RENEWAL DRAWING
NUCLEAR PLANT N2 AND H2
SUPPLY PIPING
FLOW DIAGRAM

THREE MILE ISLAND
AmerGen

SHEET 1 OF 1 LR-302-720 REV 0

DWG NO LR-302-720 SH. 1

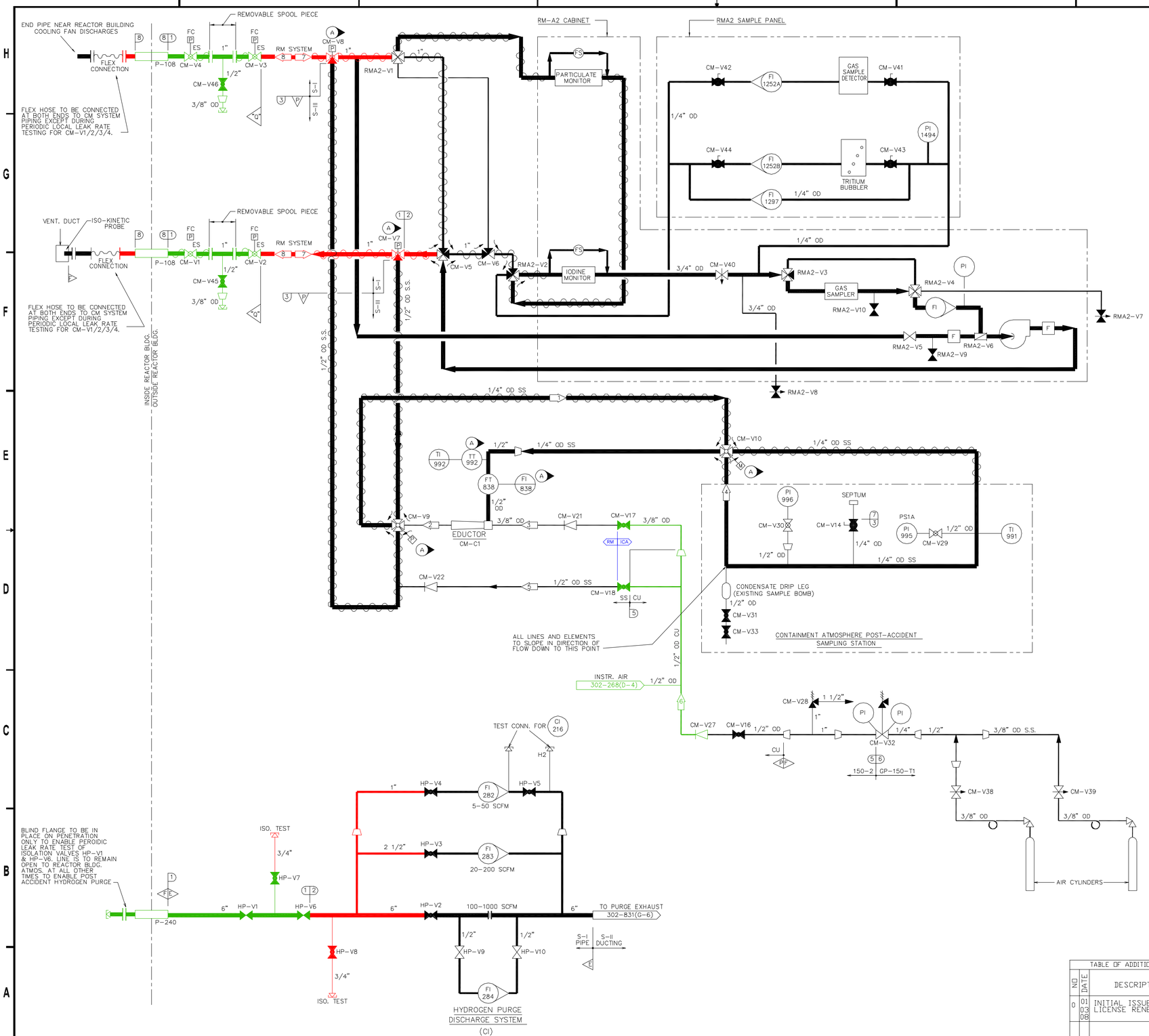

OPERATING DATA
(CONT. AT. P.A.S.S. ONLY: RM-A2 NOT INCLUDED)

#	SCFM	PSIA	°F(MAX)	BY	REMARKS	REV
1	0.95	69.7	250	DHS	RECIRCULATION WITH	
2	8.45	70.0	<165	DHS	BUILDING @	
3	7.50	114.7		DHS	55 PSIG (OR LESS)	
4	0	14.7	250	DHS	AND 160°F(OR LESS)	
5	0	69.7		DHS		
7	0.95	69.7	160	DHS		11
8	8.45	70.0	165	DHS		11
1	0.2	44.7	250	DHS	SAMPLING WITH	
2	7.70	45.0	<165	DHS	BUILDING @	
3	7.50	114.7		DHS	30 PSIG (OR LESS)	
4	0.2	17.7	250	DHS	AND 160°F(OR LESS)	
5	0	44.7		DHS		
7	0.2	44.7	160	DHS		11
8	7.70	45.0	165	DHS		11
1	0.75	44.7	250	DHS	PURGING WITH	
2	8.25	45.0	<165	DHS	BUILDING @	
3	7.50	114.7		DHS	30 PSIG (OR LESS)	
4	0.75	17.7	250	DHS	AND 160°F(OR LESS)	
5	0.75	45		DHS		
7	0	44.7	160	DHS		11
8	8.25	45.0	165	DHS		11
1	21	69.7	250	DHS	MAXIMUM LEAK	
6	7.5	94.7	120	EJA	WHEN REQUIRED	

DESIGN DATA

#	NORMAL PSIG	NORMAL °F	UPSET PSIG	UPSET °F	REMARKS	REV
1	0	120	65	300		
2	0	120	5	120		
3	65	300	150	300		
4	3	250	150	250		
5	150	120	165	120		
6	2200	120	2420	120		
7	30	200	30	200		
8	30	120	55	165		11

(A) FROM LOCAL CONTROL PANEL

NOTES:

1. THIS DRAWING IS BASED ON DRAWING 302-721, REVISION 24.
2. THIS DRAWING INCLUDES THE FOLLOWING LICENSE RENEWAL SYSTEMS:
   CI – CONTAINMENT ISOLATION SYSTEM
   ICA – INSTRUMENT & CONTROL AIR SYSTEM
   RM – RADIATION MONITORING SYSTEM
3. VALVE POSITIONS SHOWN FOR REFERENCE ONLY. ACTUAL POSITIONS CONTROLLED BY PROCEDURES.
4. ALL INSTRUMENT TAG NUMBERS ARE PREFIXED BY SYSTEM DESIGNATOR UNLESS OTHERWISE NOTED.
5. VALVES CM-V7 & CM-V8 ARE TO BE SEISMICALLY SUPPORTED PER SPECIFICATION SP-5578, BUT NEED NOT BE SEISMICALLY QUALIFIED.
6. PIPING SYSTEM IS SEISMIC CLASS I.

TABLE OF ADDITIONS & CHANGES

NO	DATE	DESCRIPTION	REV'D	CHK'D	APP'D
0	01 03 08	INITIAL ISSUE FOR LICENSE RENEWAL	A B	D P C	M A M

MECHANICAL

LICENSE RENEWAL DRAWING
HYDROGEN PURGE
DISCH. AND CONTAINMENT
ATMOSPHERE POST ACCIDENT SAMPLING
FLOW DIAGRAM

THREE MILE ISLAND
AmerGen

SHEET 1 OF 1 LR-302-721 REV 0

DWG.NO. LR-302-721 SH. 1

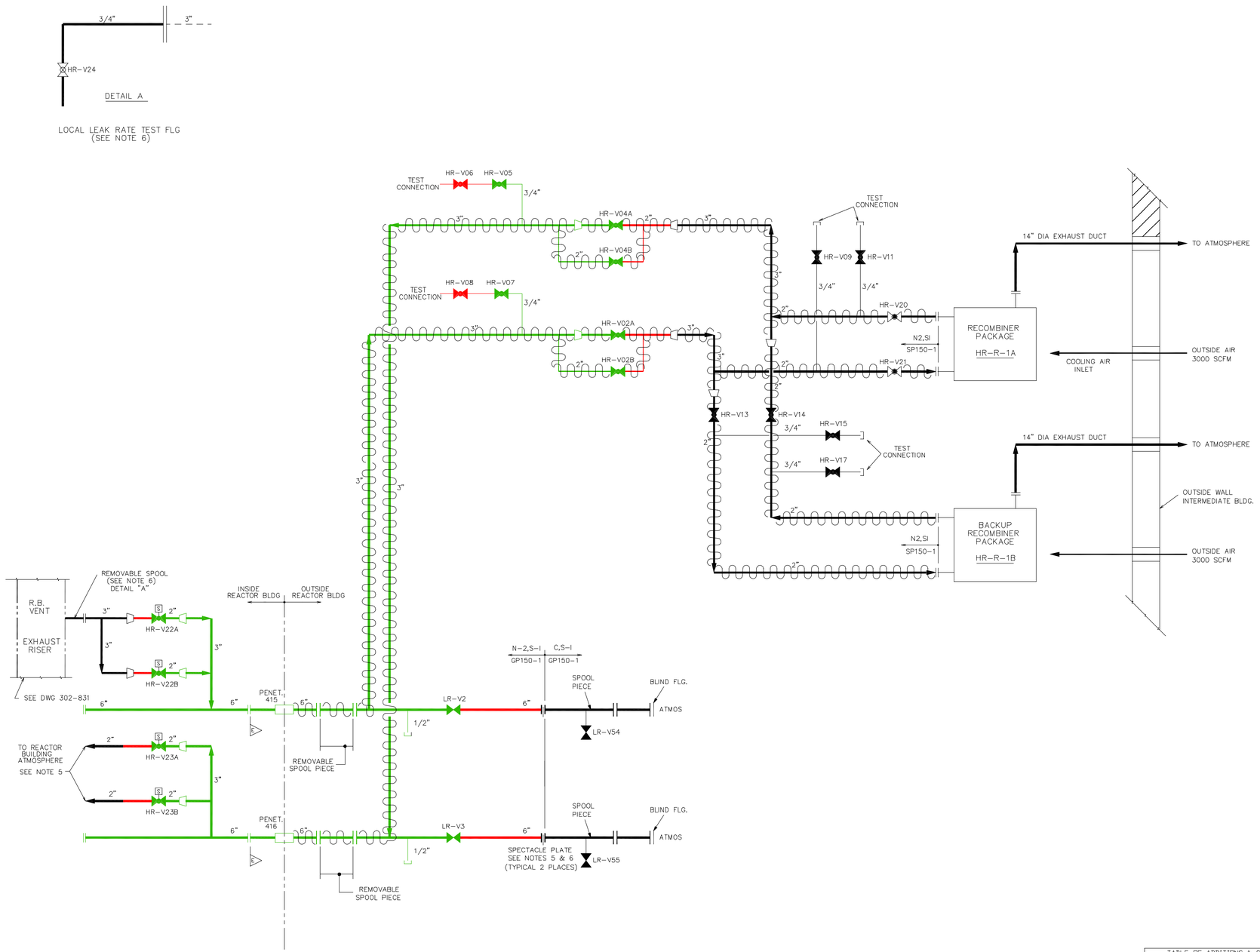

NOTES

1. THIS DRAWING IS BASED ON DRAWING 302-722, REVISION 4.
2. THIS DRAWING INCLUDES THE FOLLOWING LICENSE RENEWAL SYSTEMS:
   CI – CONTAINMENT ISOLATION SYSTEM
3. VALVE POSITIONS SHOWN FOR REFERENCE ONLY. ACTUAL POSITIONS CONTROLLED BY PROCEDURES.
4. ALL INSTRUMENT TAG NUMBERS ARE PREFIXED BY SYSTEM DESIGNATOR UNLESS OTHERWISE NOTED.
5. THESE CONNECTIONS ARE USED FOR ISOLATION VALVE LEAK RATE TESTING OF VALVES HR-V23A AND HR-V23B.
6. DETAIL "A" LOCAL LEAK RATE TEST FLANGE IS USED ONLY DURING ISOLATION LEAK RATE TESTING OF VALVES HR-V22A AND HR-V22B. DURING NORMAL OPERATION THE REMOVABLE SPOOL IS INSTALLED.

TABLE OF ADDITIONS & CHANGES

NO.	DATE	DESCRIPTION	REV'D	CHK'D	APP'D
0	01 03 08	INITIAL ISSUE FOR LICENSE RENEWAL	A B	W H F	D P C

MECHANICAL

LICENSE RENEWAL DRAWING
HYDROGEN RECOMBINER
FLOW DIAGRAM

THREE MILE ISLAND
AmerGen

SHEET 1 OF 1 LR-302-722 REV 0

DWG.NO. LR-302-722 SH. 1

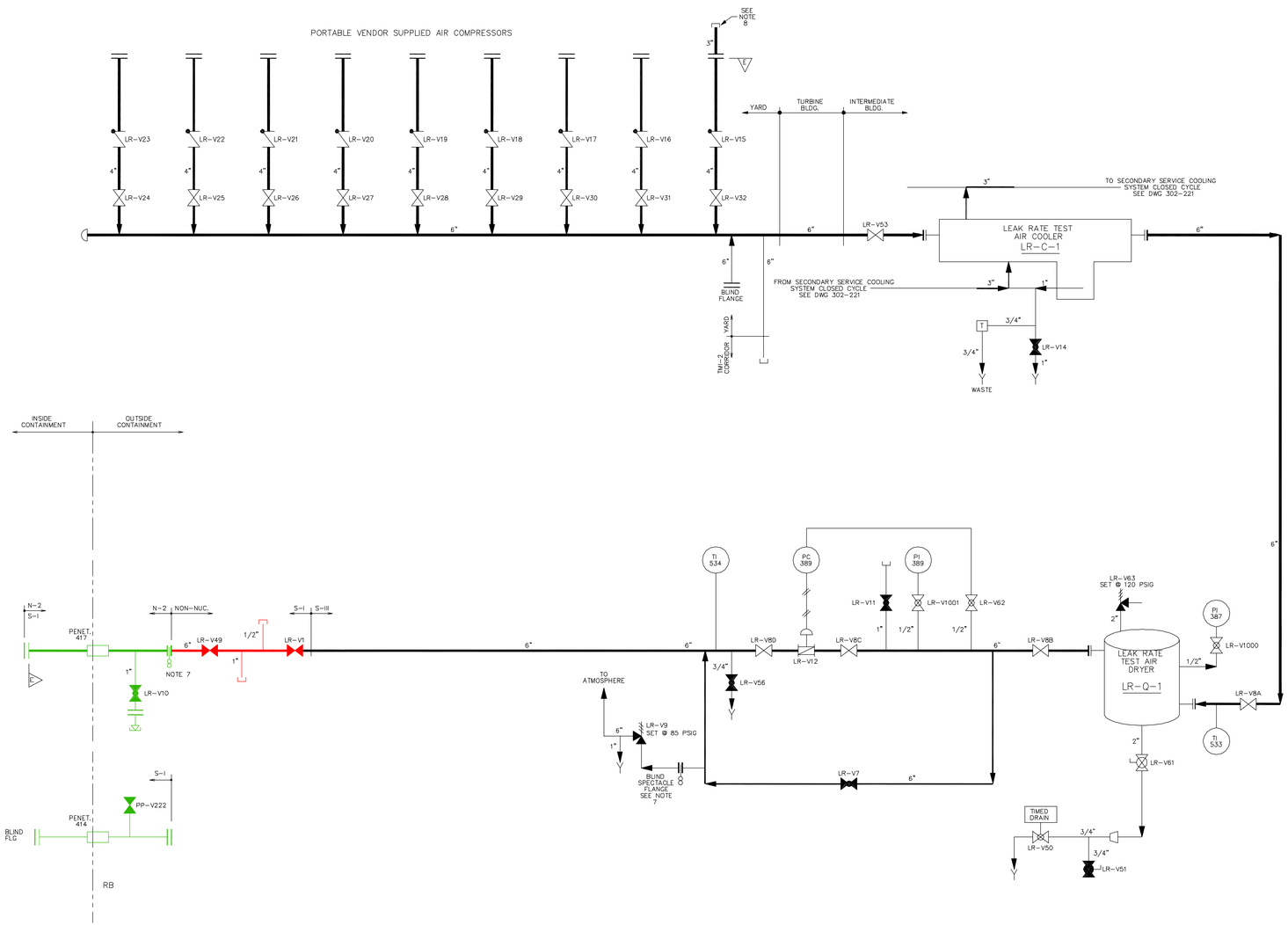

SYSTEM DESIGN BASIS–SEISMIC CLASS I, EXCEPT AS NOTED.

NOTES:

1. THIS DRAWING IS BASED ON DRAWING 302–725, REVISION 20.
2. THIS DRAWING INCLUDES THE FOLLOWING LICENSE RENEWAL SYSTEMS:
   CI – CONTAINMENT ISOLATION SYSTEM
3. VALVE POSITION SHOWN FOR REFERENCE ONLY. ACTUAL POSITIONS CONTROLLED BY PROCEDURES.
4. ALL INSTRUMENT TAG NUMBERS ARE PREFIXED BY SYSTEM DESIGNATOR UNLESS OTHERWISE NOTED.
5. ALL SUPPORT SYSTEMS ARE SEISMIC CLASS III UNLESS OTHERWISE NOTED.
6. LEAK RATE TEST AIR DRYER IS SEISMICALLY RESTAINED (REF. ECM–63).
7. THE SPECTACLE FLANGE IS IN THE BLANK POSITION EXCEPT DURING ILRT.
8. LEAK RATE TEST VALVES ASSCOCIATED WITH THE HYDROGEN RECOMBINER SYSTEM HAVE BEEN RELOCATED TO LR–302–722.

TABLE OF ADDITIONS & CHANGES

NO	DATE	DESCRIPTION	REV'D	CHK'D	APP'D
0	01 03 03	INITIAL ISSUE FOR LICENSE RENEWAL	T W	W H F	D P C

MECHANICAL

LICENSE RENEWAL DRAWING
CONTAINMENT VESSEL LEAK RATE TEST
FLOW DIAGRAM

THREE MILE ISLAND
AmerGen

SHEET 1 OF 1 LR-302-725 REV 0

DWG.NO. LR-302-725 SH. 1

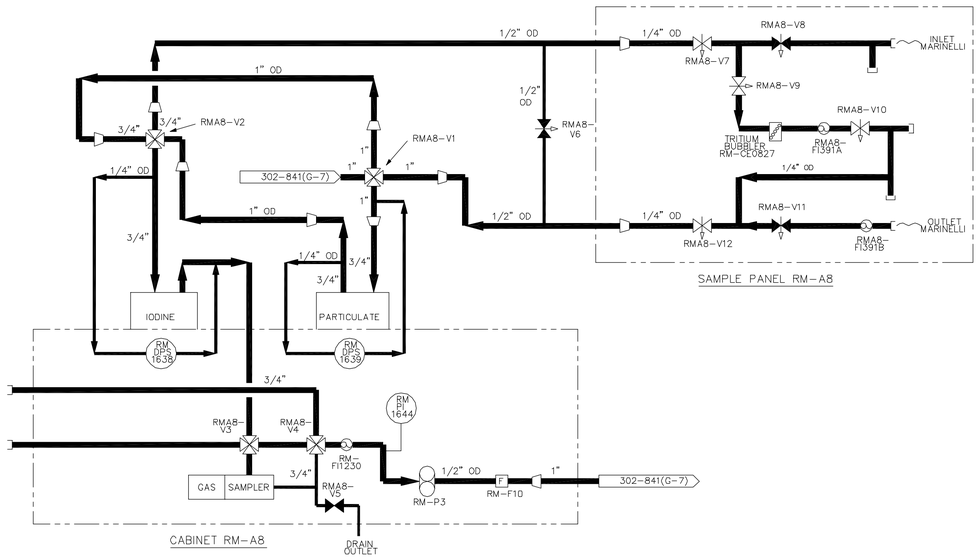

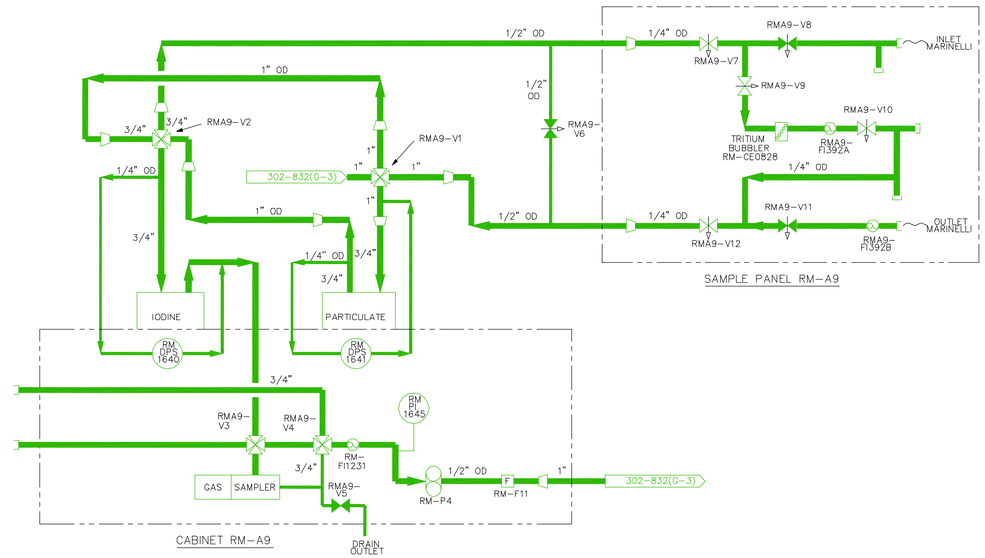

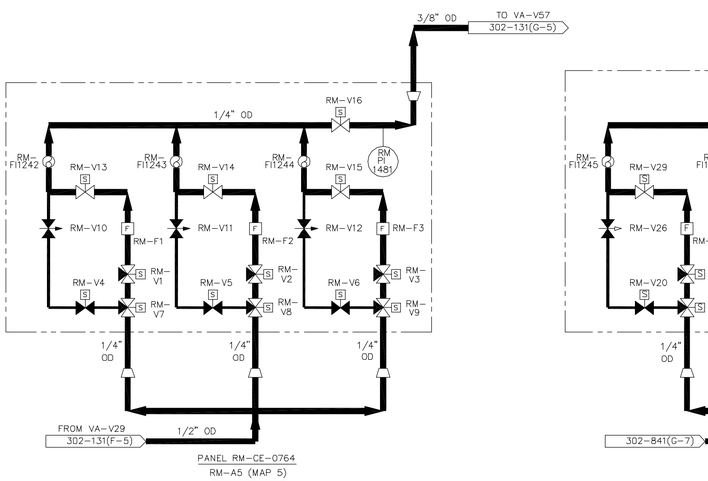

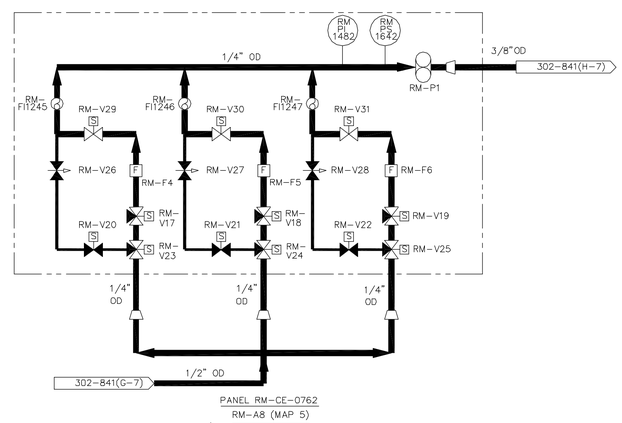

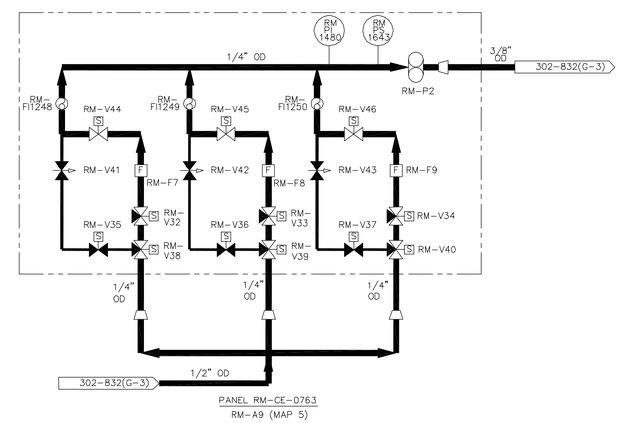

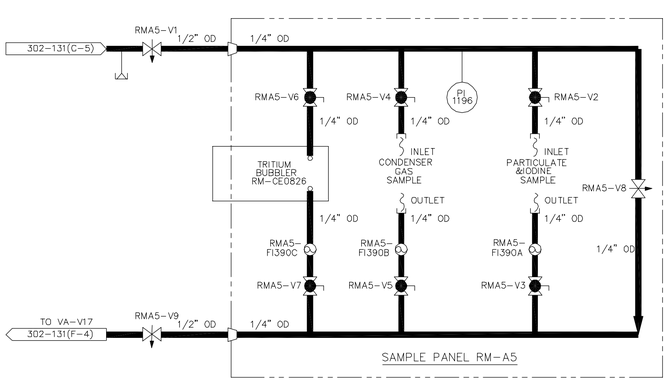

NOTES:

1. THIS DRAWING IS BASED ON DRAWING 302-730, REVISION 3.
2. THIS DRAWING INCLUDES THE FOLLOWING LICENSE RENEWAL SYSTEMS:
   RM – RADIATION MONITORING SYSTEM
3. VALVE POSITION SHOWN FOR REFERENCE ONLY. ACTUAL POSITIONS CONTROLLED BY PROCEDURES.
4. ALL INSTRUMENT TAG NUMBERS ARE PREFIXED BY SYSTEM DESIGNATOR UNLESS OTHERWISE NOTED.

TABLE OF ADDITIONS & CHANGES

NO	DATE	DESCRIPTION	REV'D	CHK'D	APP'D
0	01 03 08	INITIAL ISSUE FOR LICENSE RENEWAL	A B	D T C	M A M

MECHANICAL

LICENSE RENEWAL DRAWING
RADIATION MONITORING & SAMPLING
SAMPLING PANEL DETAILS
FLOW DIAGRAM

THREE MILE ISLAND
AmerGen

SHEET 1 OF 1 | LR-302-730 | REV. 0

DWG.NO. LR-302-730 SH. 1

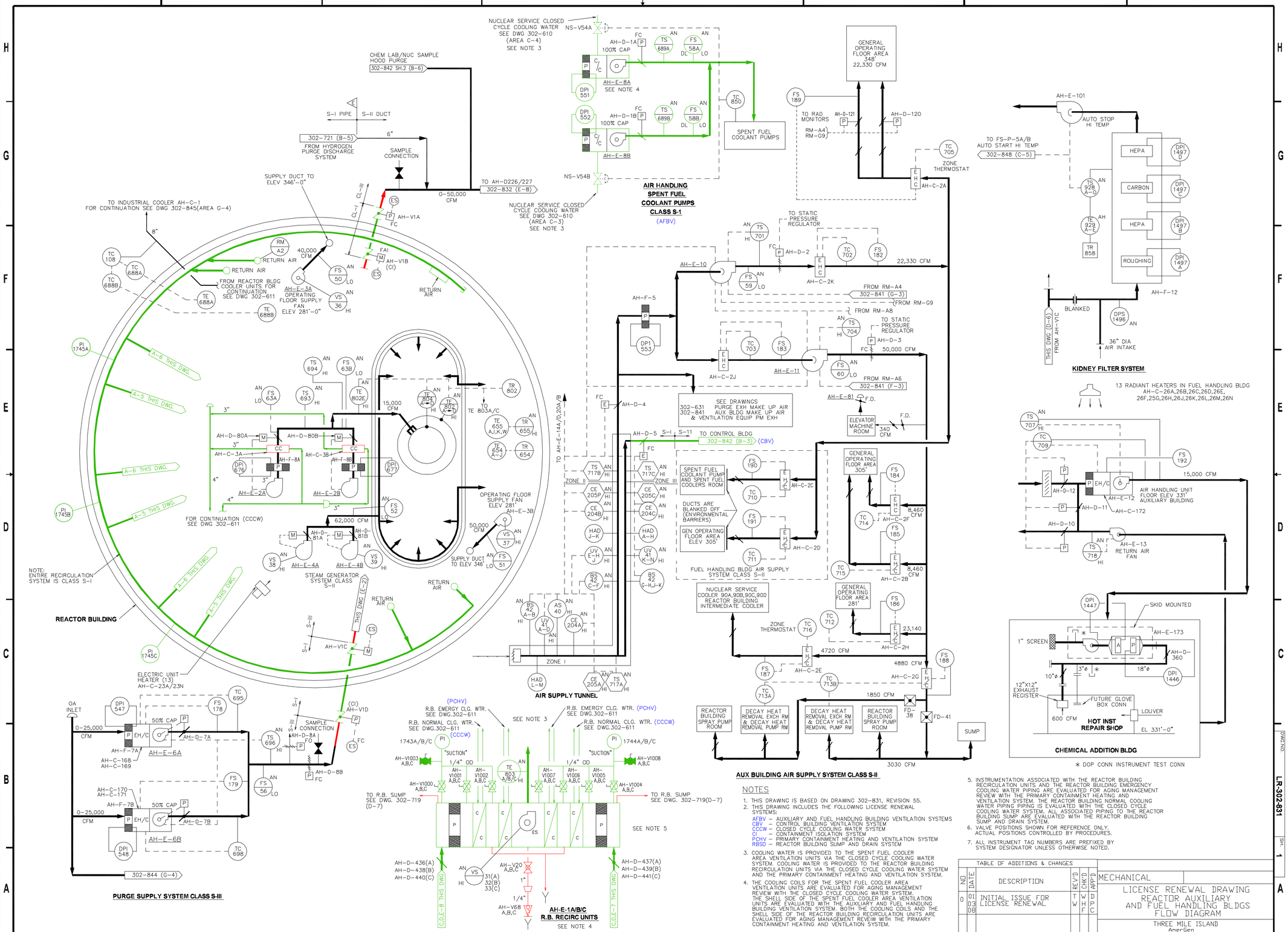

NOTES

1. THIS DRAWING IS BASED ON DRAWING 302-831, REVISION 55.
2. THIS DRAWING INCLUDES THE FOLLOWING LICENSE RENEWAL SYSTEMS:
   - AFBV – AUXILIARY AND FUEL HANDLING BUILDING VENTILATION SYSTEMS
   - CBV – CONTROL BUILDING VENTILATION SYSTEM
   - CCCW – CLOSED CYCLE COOLING WATER SYSTEM
   - CI – CONTAINMENT ISOLATION SYSTEM
   - PCHV – PRIMARY CONTAINMENT HEATING AND VENTILATION SYSTEM
   - RBSD – REACTOR BUILDING SUMP AND DRAIN SYSTEM
3. COOLING WATER IS PROVIDED TO THE SPENT FUEL COOLER AREA VENTILATION UNITS VIA THE CLOSED CYCLE COOLING WATER SYSTEM. COOLING WATER IS PROVIDED TO THE REACTOR BUILDING RECIRCULATION UNITS VIA THE CLOSED CYCLE COOLING WATER SYSTEM AND THE PRIMARY CONTAINMENT HEATING AND VENTILATION SYSTEM.
4. THE COOLING COILS FOR THE SPENT FUEL COOLER AREA VENTILATION UNITS ARE EVALUATED FOR AGING MANAGEMENT REVIEW WITH THE CLOSED CYCLE COOLING WATER SYSTEM. THE SHELL SIDE OF THE SPENT FUEL COOLER AREA VENTILATION UNITS ARE EVALUATED WITH THE AUXILIARY AND FUEL HANDLING BUILDING VENTILATION SYSTEM. BOTH THE COOLING COILS AND THE SHELL SIDE OF THE REACTOR BUILDING RECIRCULATION UNITS ARE EVALUATED FOR AGING MANAGEMENT REVEIW WITH THE PRIMARY CONTAINMENT HEATING AND VENTILATION SYSTEM.
5. INSTRUMENTATION ASSOCIATED WITH THE REACTOR BUILDING RECIRCULATION UNITS AND THE REACTOR BUILDING EMERGENCY COOLING WATER PIPING ARE EVALUATED FOR AGING MANAGEMENT REVIEW WITH THE PRIMARY CONTAINMENT HEATING AND VENTILATION SYSTEM. THE REACTOR BUILDING NORMAL COOLING WATER PIPING PIPING IS EVALUATED WITH THE CLOSED CYCLE COOLING WATER SYSTEM. ALL ASSOCIATED PIPING TO THE REACTOR BUILDING SUMP ARE EVALUATED WITH THE REACTOR BUILDING SUMP AND DRAIN SYSTEM.
6. VALVE POSITIONS SHOWN FOR REFERENCE ONLY. ACTUAL POSITIONS CONTROLLED BY PROCEDURES.
7. ALL INSTRUMENT TAG NUMBERS ARE PREFIXED BY SYSTEM DESIGNATOR UNLESS OTHERWISE NOTED.

TABLE OF ADDITIONS & CHANGES

NO	DATE	DESCRIPTION	REV'D	CHK'D	APP'D
0	01 03 08	INITIAL ISSUE FOR LICENSE RENEWAL	T W	W H F	D P C

MECHANICAL

LICENSE RENEWAL DRAWING
REACTOR AUXILIARY AND FUEL HANDLING BLDGS FLOW DIAGRAM

THREE MILE ISLAND
AmerGen

SHEET 1 OF 1 | LR-302-831 | REV 0

DWG. NO. LR-302-831 SH. 1

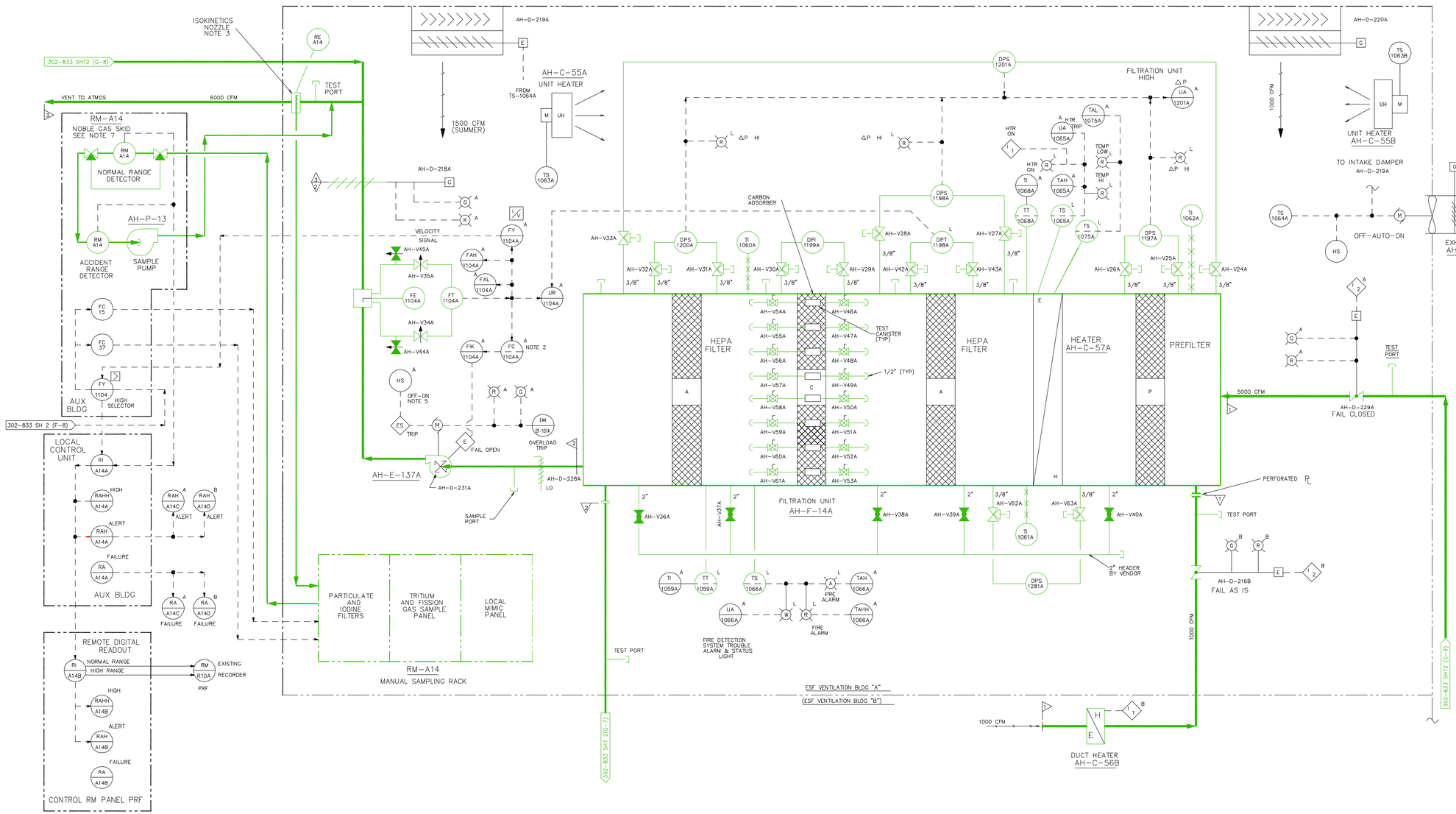

NOTES

1. THIS DRAWING IS BASED ON DRAWING 302-833 REVISION 4.
2. THIS DRAWING INCLUDES THE FOLLOWING LICENSE RENEWAL SYSTEMS:
   AFBV – AUXILIARY AND FUEL HANDLING BUILDING VENTILATION SYSTEM
   RM – RADIATION MONITORING SYSTEM
3. THE ISOKENETIC NOZZLES, MANUAL SAMPLING RACK, AND ATTACHED SAMPLE LINES ARE EVALUATED FOR AGING MANAGEMENT REVIEW WITH THE RADIATION MONITORING SYSTEM.
4. VALVE POSITIONS SHOWN FOR REFERENCE ONLY. ACTUAL POSITIONS CONTROLLED BY PROCEDURES.
5. ALL INSTRUMENT TAG NUMBERS ARE PREFIXED BY SYSTEM DESIGNATOR UNLESS OTHERWISE NOTED.
6. SYSTEM START-UP WILL BE MANUAL.

TABLE OF ADDITIONS & CHANGES

NO	DATE	DESCRIPTION	REV'D	CHK'D	APP'D
0	01 03 08	INITIAL ISSUE FOR LICENSE RENEWAL	A B	W H F	D P C

MECHANICAL

LICENSE RENEWAL DRAWING
ESF VENTILATION SYSTEM "A"
FLOW DIAGRAM
FUEL HANDLING AREA

THREE MILE ISLAND
AmerGen

SHEET 1 OF 2 LR-302-833 REV 0

DWG.NO. LR-302-833 SH. 1

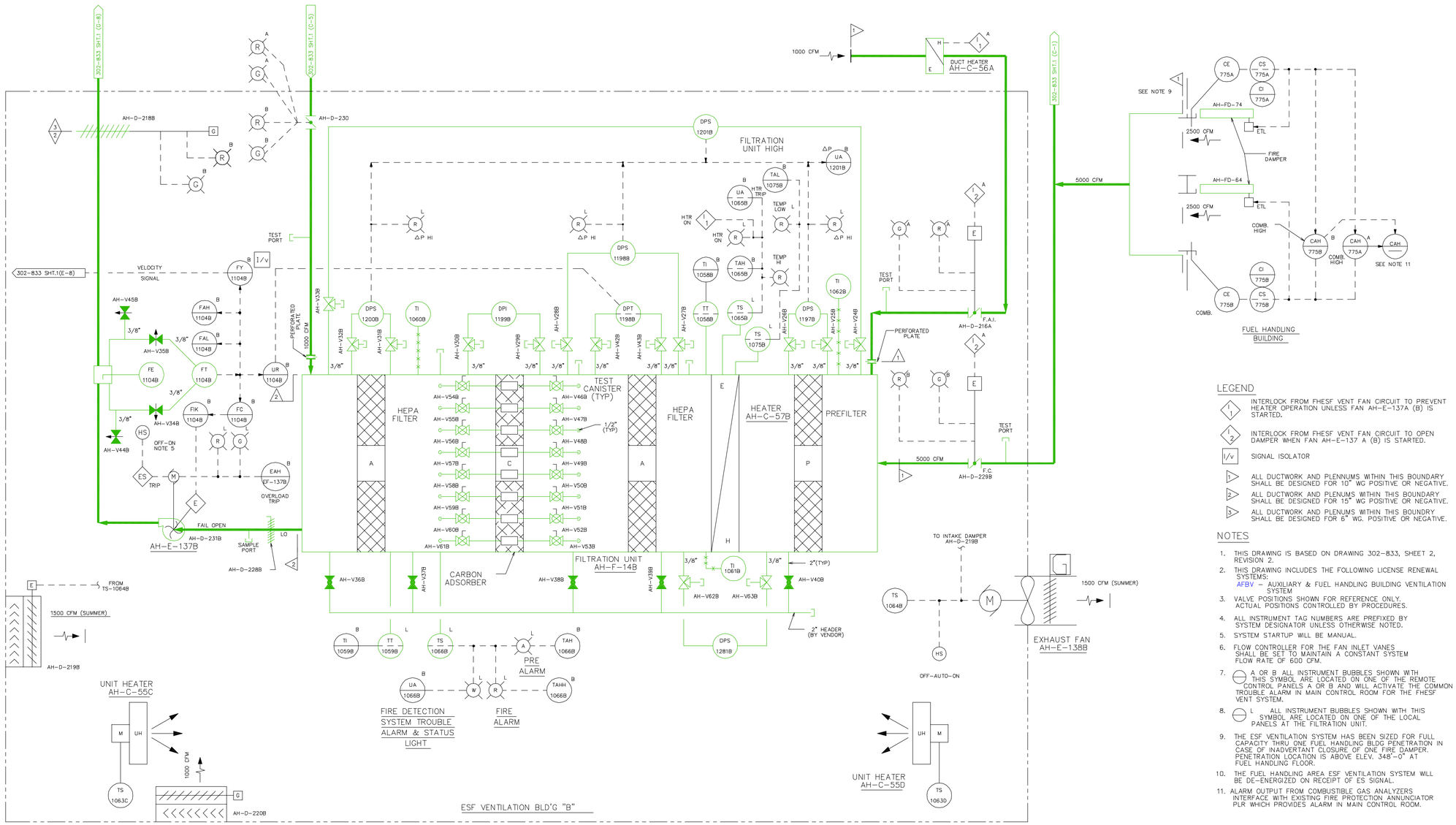

LEGEND

- 1 — INTERLOCK FROM FHESF VENT FAN CIRCUIT TO PREVENT HEATER OPERATION UNLESS FAN AH-E-137A (B) IS STARTED.
- 1/2 — INTERLOCK FROM FHESF VENT FAN CIRCUIT TO OPEN DAMPER WHEN FAN AH-E-137 A (B) IS STARTED.
- I/V — SIGNAL ISOLATOR
- 1 — ALL DUCTWORK AND PLENNUMS WITHIN THIS BOUNDARY SHALL BE DESIGNED FOR 10" WG POSITIVE OR NEGATIVE.
- 2 — ALL DUCTWORK AND PLENUMS WITHIN THIS BOUNDARY SHALL BE DESIGNED FOR 15" WG POSITIVE OR NEGATIVE.
- 3 — ALL DUCTWORK AND PLENUMS WITHIN THIS BOUNDRY SHALL BE DESIGNED FOR 6" WG. POSITIVE OR NEGATIVE.

NOTES

1. THIS DRAWING IS BASED ON DRAWING 302-833, SHEET 2, REVISION 2.
2. THIS DRAWING INCLUDES THE FOLLOWING LICENSE RENEWAL SYSTEMS:
   AFBV – AUXILIARY & FUEL HANDLING BUILDING VENTILATION SYSTEM
3. VALVE POSITIONS SHOWN FOR REFERENCE ONLY. ACTUAL POSITIONS CONTROLLED BY PROCEDURES.
4. ALL INSTRUMENT TAG NUMBERS ARE PREFIXED BY SYSTEM DESIGNATOR UNLESS OTHERWISE NOTED.
5. SYSTEM STARTUP WILL BE MANUAL.
6. FLOW CONTROLLER FOR THE FAN INLET VANES SHALL BE SET TO MAINTAIN A CONSTANT SYSTEM FLOW RATE OF 600 CFM.
7. A OR B ALL INSTRUMENT BUBBLES SHOWN WITH THIS SYMBOL ARE LOCATED ON ONE OF THE REMOTE CONTROL PANELS A OR B AND WILL ACTIVATE THE COMMON TROUBLE ALARM IN MAIN CONTROL ROOM FOR THE FHESF VENT SYSTEM.
8. L ALL INSTRUMENT BUBBLES SHOWN WITH THIS SYMBOL ARE LOCATED ON ONE OF THE LOCAL PANELS AT THE FILTRATION UNIT.
9. THE ESF VENTILATION SYSTEM HAS BEEN SIZED FOR FULL CAPACITY THRU ONE FUEL HANDLING BLDG PENETRATION IN CASE OF INADVERTANT CLOSURE OF ONE FIRE DAMPER. PENETRATION LOCATION IS ABOVE ELEV. 348'-0" AT FUEL HANDLING FLOOR.
10. THE FUEL HANDLING AREA ESF VENTILATION SYSTEM WILL BE DE-ENERGIZED ON RECEIPT OF ES SIGNAL.
11. ALARM OUTPUT FROM COMBUSTIBLE GAS ANALYZERS INTERFACE WITH EXISTING FIRE PROTECTION ANNUNCIATOR PLR WHICH PROVIDES ALARM IN MAIN CONTROL ROOM.

TABLE OF ADDITIONS & CHANGES

NO	DATE	DESCRIPTION	REV'D	CHK'D	APP'D
0	01 03 08	INITIAL ISSUE FOR LICENSE RENEWAL	A B	W H F	D P C

MECHANICAL

LICENSE RENEWAL DRAWING
ESF VENTILATION SYSTEM "B"
FLOW DIAGRAM
FUEL HANDELING AREA

THREE MILE ISLAND
AmerGen

SHEET 2 OF 2 LR-302-833 REV 0

DWG.NO. LR-302-833 SH. 2

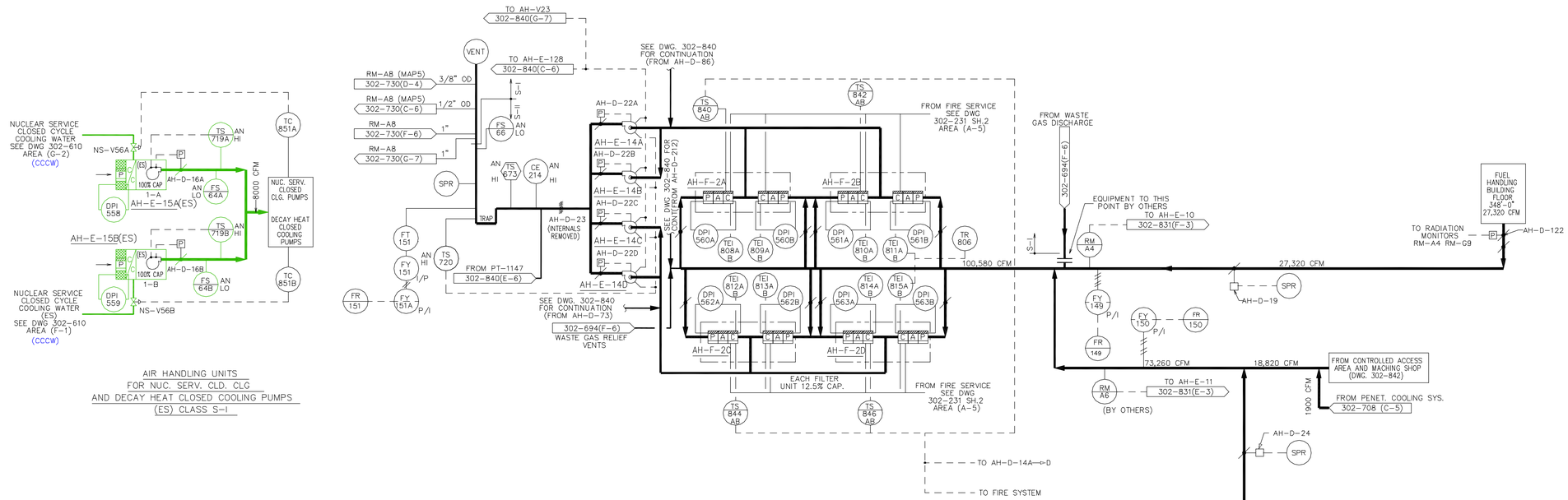

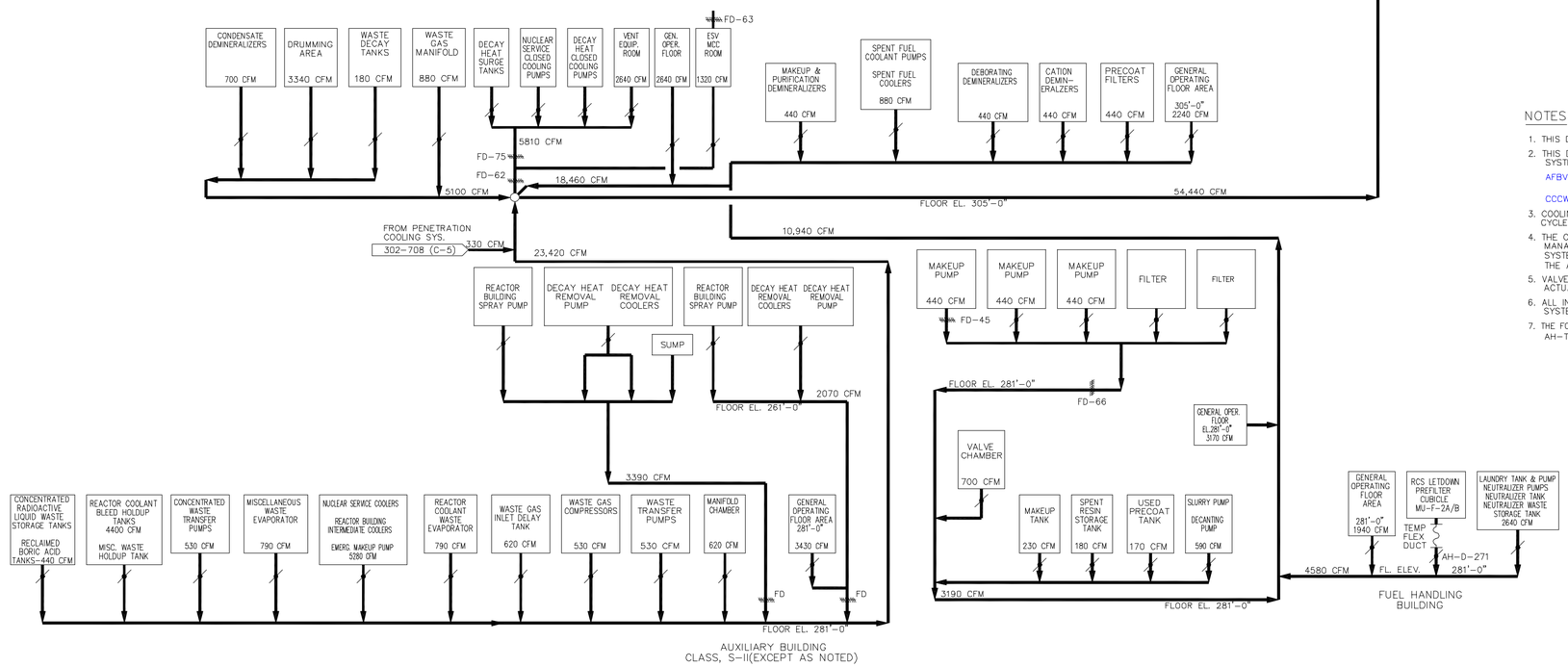

NOTES

1. THIS DRAWING IS BASED ON DRAWING 302-841 REVISION 49.
2. THIS DRAWING INCLUDES THE FOLLOWING LICENSE RENEWAL SYSTEMS:
   AFBV – AUXILIARY & FUEL HANDLING BUILDING VENTILATION SYSTEM
   CCCW – CLOSED CYCLE COOLING WATER SYSTEM
3. COOLING WATER IS PROVIDED TO AH-E-15A/B VIA THE CLOSED CYCLE COOLING WATER SYSTEM.
4. THE COOLING COILS FOR AH-E-15A/B ARE EVALUATED FOR AGING MANAGEMENT REVIEW WITH THE CLOSED CYCLE COOLING WATER SYSTEM. THE SHELL SIDE OF AH-E-15A/B ARE EVALUATED WITH THE AUXILIARY AND FUEL HANDLING BUILDING VENTILATION SYSTEM.
5. VALVE POSITIONS SHOWN FOR REFERENCE ONLY. ACTUAL POSITIONS CONTROLLED BY PROCEDURES.
6. ALL INSTRUMENT TAG NUMBERS ARE PREFIXED BY SYSTEM DESIGNATOR UNLESS OTHERWISE NOTED.
7. THE FOLLOWING INSTRUMENTS ARE INSTALLED SPARES BUT NOT CONNECTED: AH-TS-841A/B, AH-TS-843A/B, AH-TS-845A/B, AH-TS-847A/B

TABLE OF ADDITIONS & CHANGES

NO	DATE	DESCRIPTION	REV'D	CHK'D	APP'D
0	01 03 08	INITIAL ISSUE FOR LICENSE RENEWAL	A B	W H F	D P C

MECHANICAL

LICENSE RENEWAL DRAWING
AUXILIARY AND FUEL HANDELING BUILDINGS VENTILATION FLOW DIAGRAM

THREE MILE ISLAND
AmerGen

SHEET 1 OF 1 | LR-302-841 | 0

DWG.NO. LR-302-841 SH. 1

NOTES:

1. THIS DRAWING IS BASED ON DRAWING 302-842 REVISION 55.
2. THIS DRAWING INCLUDES THE FOLLOWING LICENSE RENEWAL SYSTEMS:
   CBV – CONTROL BUILDING VENTILATION SYSTEM
   FP – FIRE PROTECTION SYSTEM
3. VALVE POSITION SHOWN FOR REFERENCE ONLY. ACTUAL POSITIONS CONTROLLED BY PROCEDURES.
4. ALL INSTRUMENT TAG NUMBERS ARE PREFIXED BY SYSTEM DESIGNATOR UNLESS OTHERWISE NOTED.
5. THE FOLLOWING COMPONENTS ARE SEISMIC II-ANTIFALL DOWN:
   – AH-E-17A/B AND AH-F-44A/B
   – AH-C-5A/B; AH-C-7C/F; AH-C-8A/D; AH-C-9A/G
   – AH-E-21 AND AH-C-22A/E
   – AH-E-93A/B AND AH-E-94A/B

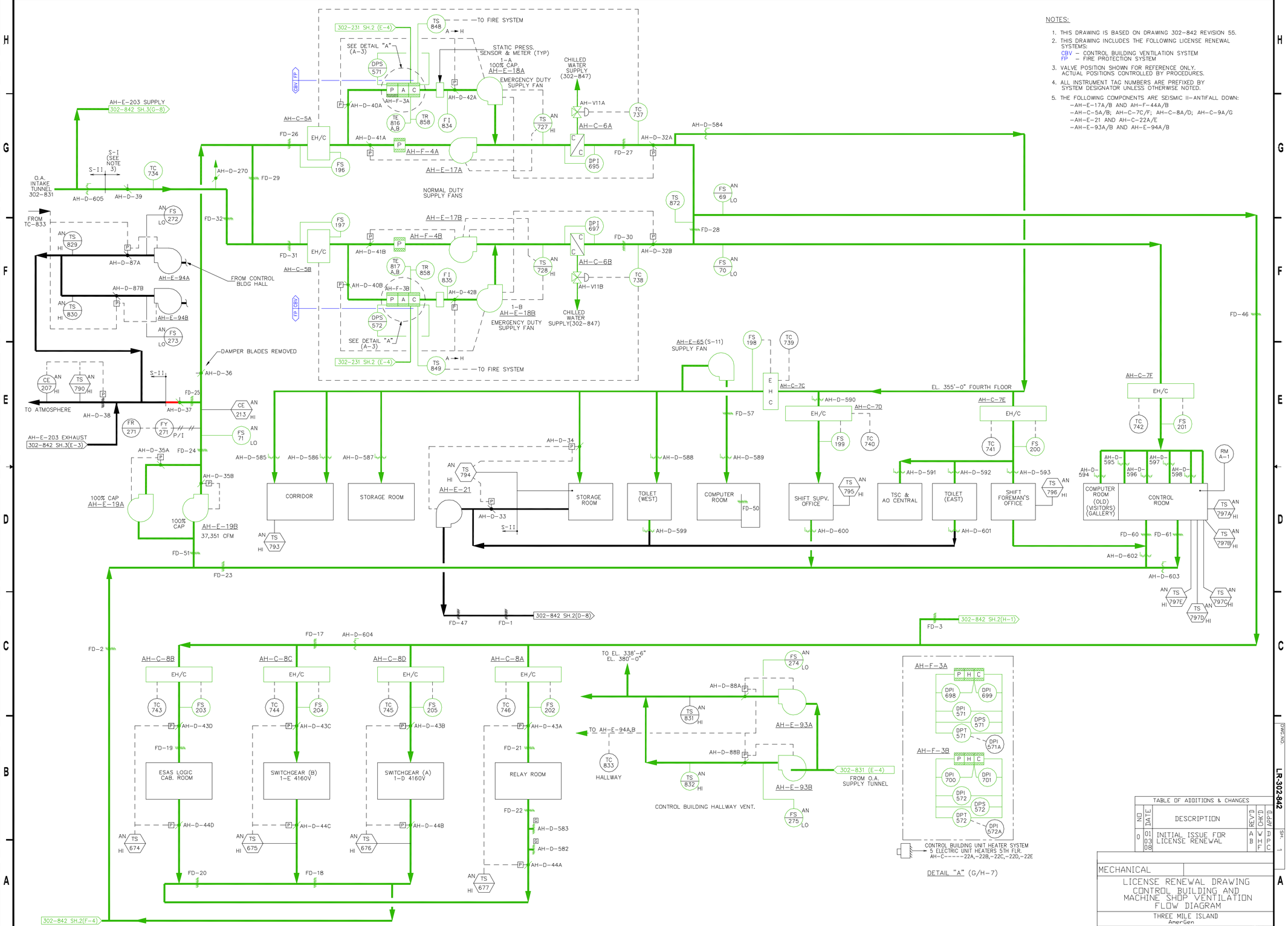

TABLE OF ADDITIONS & CHANGES					
NO	DATE	DESCRIPTION	REV'D	CHK'D	APP'D
0	01 03 08	INITIAL ISSUE FOR LICENSE RENEWAL	A B	W H F	D P C

MECHANICAL

LICENSE RENEWAL DRAWING
CONTROL BUILDING AND MACHINE SHOP VENTILATION FLOW DIAGRAM

THREE MILE ISLAND
AmerGen

SHEET 1 OF 3 | LR-302-842 | 0

DWG. NO. LR-302-842 SH. 1

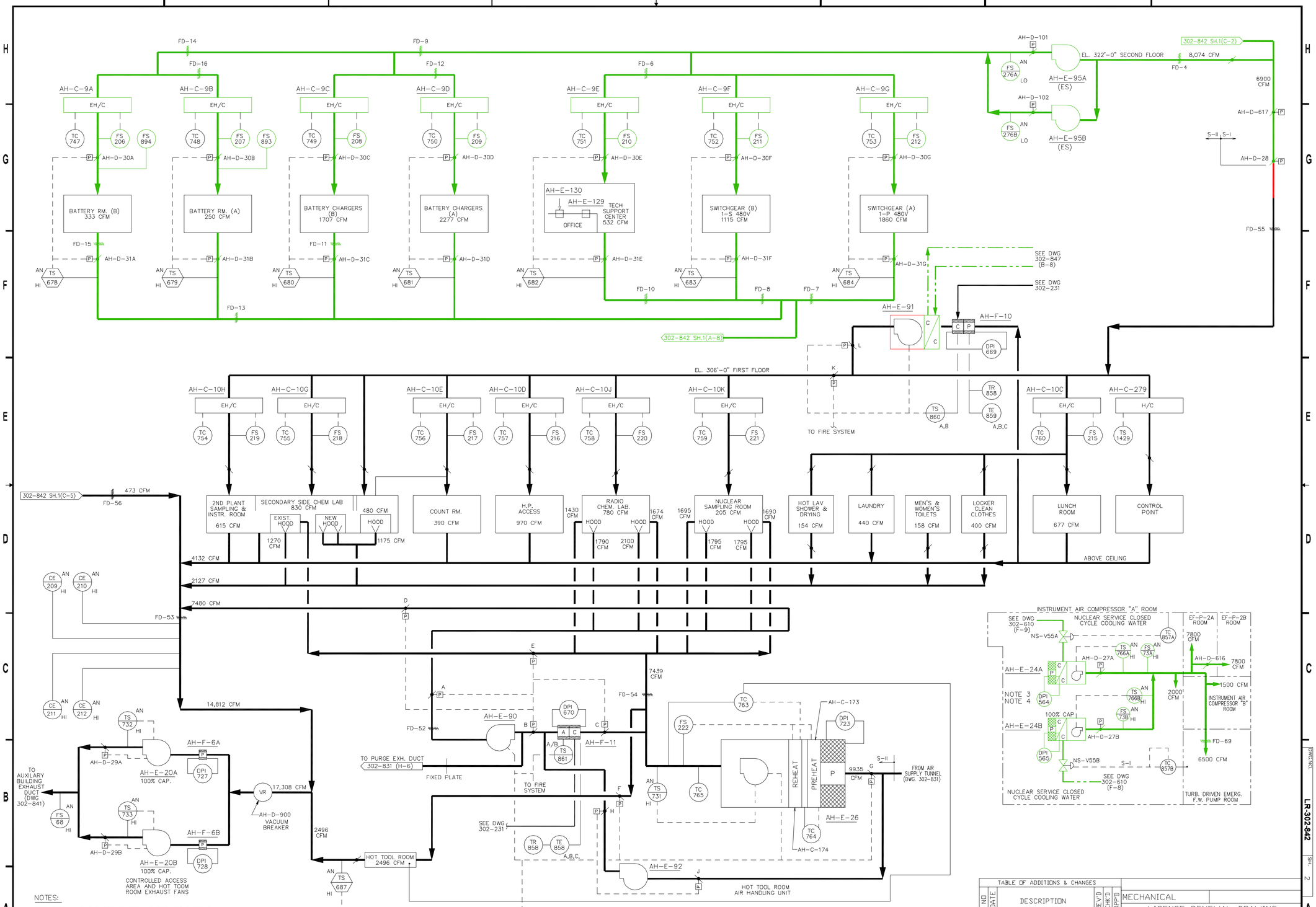

NOTES:

1. THIS DRAWING IS BASED ON DRAWING 302-842 SHEET 2 REVISION 7.
2. THIS DRAWING INCLUDES THE FOLLOWING LICENSE RENEWAL SYSTEMS:
   CBV – CONTROL BUILDING VENTILATION SYSTEM
   CCCW – CLOSED CYCLE COOLING WATER SYSTEM
   IBV – INTERMEDIATE BUILDING VENTILATION SYSTEM
3. COOLING WATER IS PROVIDED TO AH-E-24A/B AND 91 VIA THE CLOSED CYCLE COOLING WATER SYSTEM.
4. THE COOLING COILS FOR AH-E-24A/B ARE EVALUATED FOR AGING MANAGEMENT REVIEW WITH THE CLOSED CYCLE COOLING WATER SYSTEM. THE SHELL SIDE OF AH-E-24A/B ARE EVALUATED WITH THE AUXILIARY AND FUEL HANDLING BUILDING VENTILATION SYSTEM. BOTH THE COOLING COILS AND SHELL SIDE OF AH-E-91 ARE EVALUATED FOR AGING MANAGEMENT REVIEW WITH THE CONTROL BUILDING VENTILATION SYSTEM.
5. DOTTED COMPONENTS AND PIPING ARE PART OF THE CLOSED CYCLE COOLING WATER SYSTEM AND ARE SHOWN FOR INFORMATION ONLY.
6. SEE SHEET 1 FOR GENERAL NOTES.

TABLE OF ADDITIONS & CHANGES

NO	DATE	DESCRIPTION	REV'D	CHK'D	APP'D
0	01 03 00	INITIAL ISSUE FOR LICENSE RENEWAL	A B	W H F	D P C

MECHANICAL

LICENSE RENEWAL DRAWING
CONTROL BUILDING AND MACHINE SHOP VENTILATION FLOW DIAGRAM

THREE MILE ISLAND
AmerGen

SHEET 2 OF 3 | LR-302-842 | REV 0

DWG.NO. LR-302-842 SH. 2

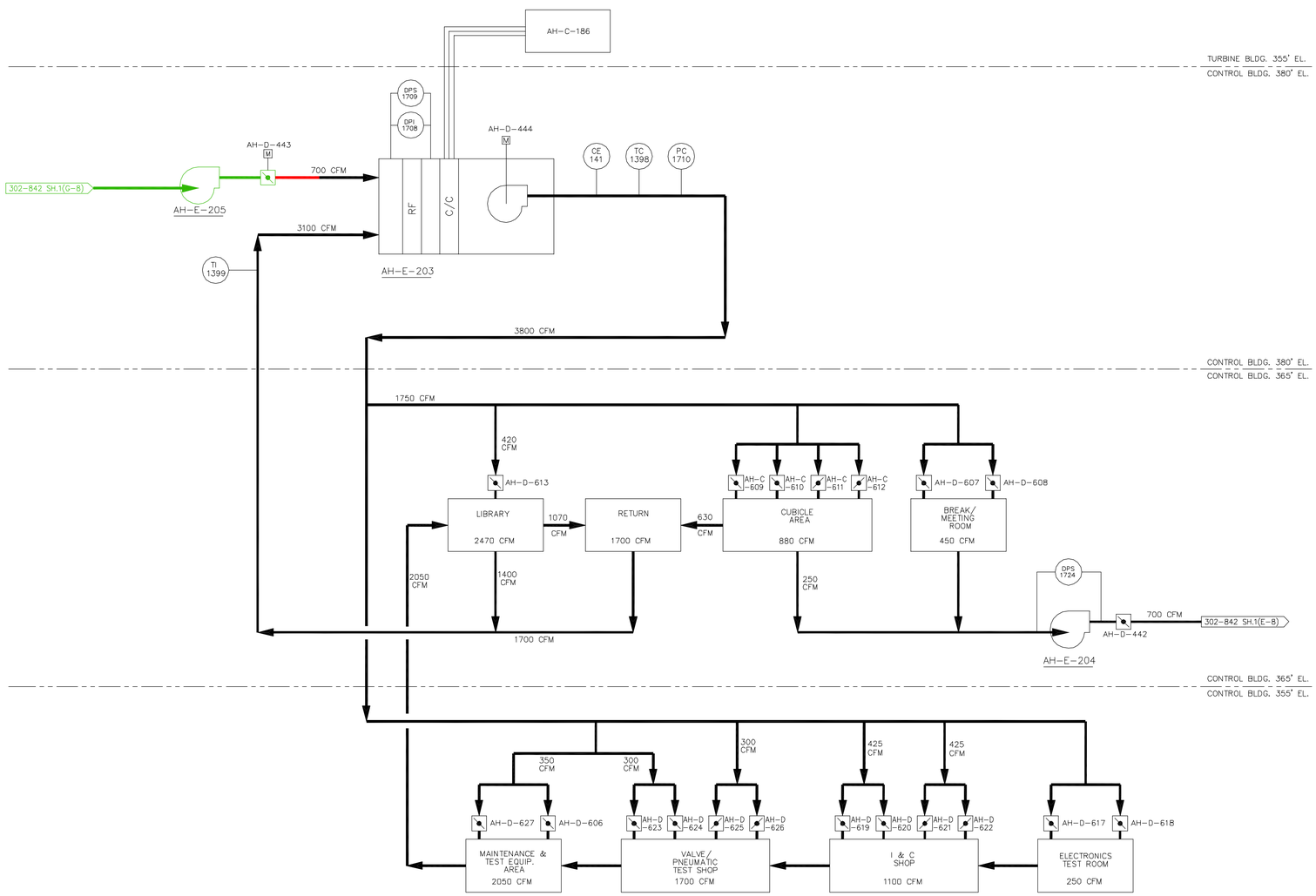

NOTES:

1. THIS DRAWING IS BASED ON DRAWING 302-842, SHEET 3, REVISION 2.
2. THIS DRAWING INCLUDES THE FOLLOWING LICENSE RENEWAL SYSTEM:
   CBV – CONTROL BUILDING VENTILATION SYSTEM
3. SEE SHEET 1 FOR GENERAL NOTES.

TABLE OF ADDITIONS & CHANGES

NO	DATE	DESCRIPTION	REV'D	CHK'D	APP'D
0	01 03 08	INITIAL ISSUE FOR LICENSE RENEWAL	A B	W H L	D P C

MECHANICAL

LICENSE RENEWAL DRAWING
CONTROL BUILDING AND MACHINE SHOP VENTILATION FLOW DIAGRAM

THREE MILE ISLAND
AmerGen

SHEET 3 OF 3 | LR-302-842 | REV 0

DWG.NO. LR-302-842 SH. 3

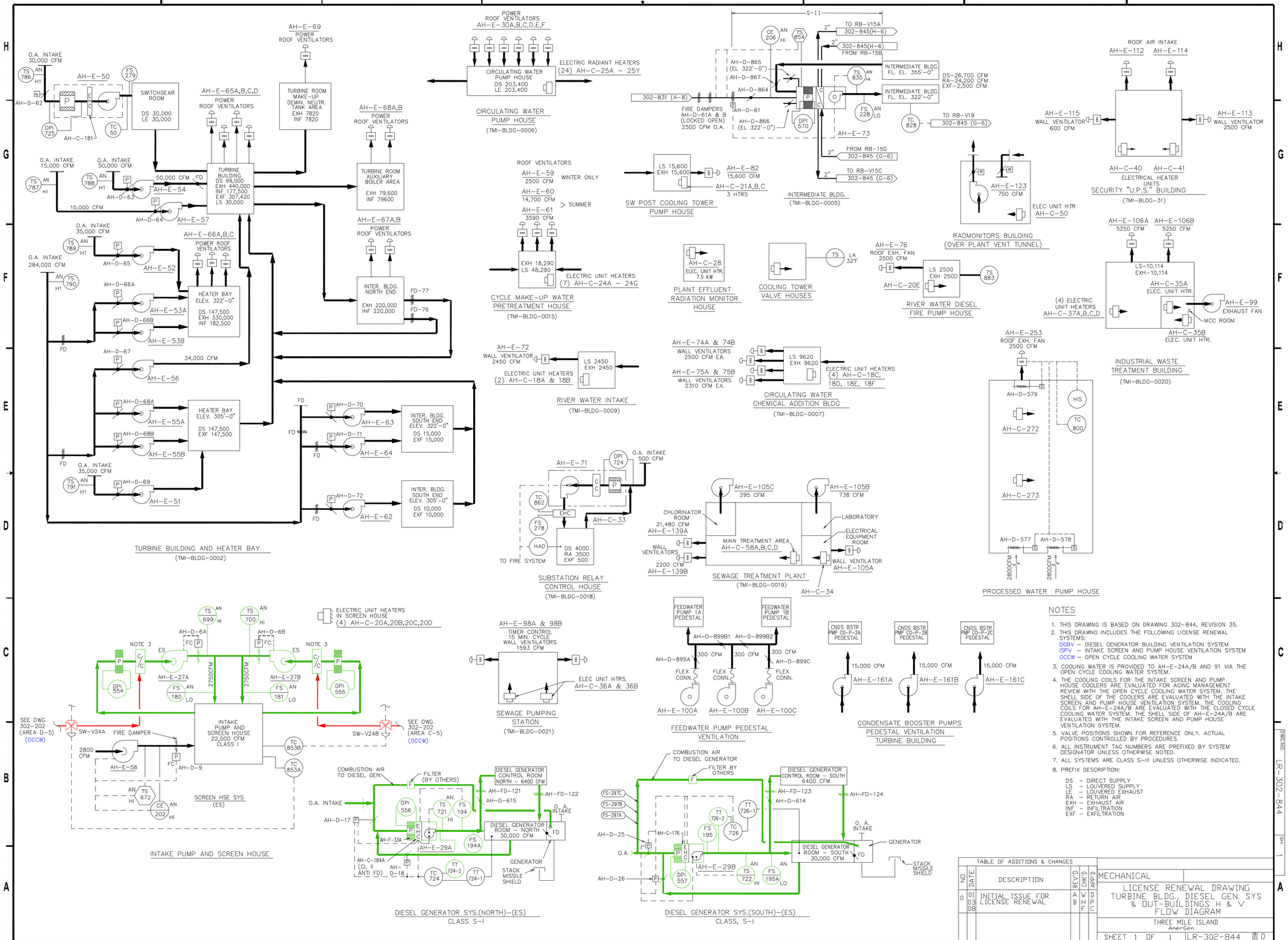

NOTES

1. THIS DRAWING IS BASED ON DRAWING 302-844, REVISION 35.
2. THIS DRAWING INCLUDES THE FOLLOWING LICENSE RENEWAL SYSTEMS:
   DGBV – DIESEL GENERATOR BUILDING VENTILATION SYSTEM
   ISPV – INTAKE SCREEN AND PUMP HOUSE VENTILATION SYSTEM
   OCCW – OPEN CYCLE COOLING WATER SYSTEM
3. COOLING WATER IS PROVIDED TO AH-E-24A/B AND 91 VIA THE OPEN CYCLE COOLING WATER SYSTEM.
4. THE COOLING COILS FOR THE INTAKE SCREEN AND PUMP HOUSE COOLERS ARE EVALUATED FOR AGING MANAGEMENT REVIEW WITH THE OPEN CYCLE COOLING WATER SYSTEM. THE SHELL SIDE OF THE COOLERS ARE EVALUATED WITH THE INTAKE SCREEN AND PUMP HOUSE VENTILATION SYSTEM. THE COOLING COILS FOR AH-E-24A/B ARE EVALUATED WITH THE CLOSED CYCLE COOLING WATER SYSTEM. THE SHELL SIDE OF AH-E-24A/B ARE EVALUATED WITH THE INTAKE SCREEN AND PUMP HOUSE VENTILATION SYSTEM.
5. VALVE POSITIONS SHOWN FOR REFERENCE ONLY. ACTUAL POSITIONS CONTROLLED BY PROCEDURES.
6. ALL INSTRUMENT TAG NUMBERS ARE PREFIXED BY SYSTEM DESIGNATOR UNLESS OTHERWISE NOTED.
7. ALL SYSTEMS ARE CLASS S-III UNLESS OTHERWISE INDICATED.
8. PREFIX DESCRIPTION:
   DS – DIRECT SUPPLY
   LS – LOUVERED SUPPLY
   LE – LOUVERED EXHAUST
   RA – RETURN AIR
   EXH – EXHAUST AIR
   INF – INFILTRATION
   EXF – EXFILTRATION

TABLE OF ADDITIONS & CHANGES

NO	DATE	DESCRIPTION	REV'D	CHK'D	APP'D
0	01 03 08	INITIAL ISSUE FOR LICENSE RENEWAL	A B	W T	D P C

MECHANICAL

LICENSE RENEWAL DRAWING
TURBINE BLDG., DIESEL GEN. SYS & OUT-BUILDINGS H & V FLOW DIAGRAM

THREE MILE ISLAND
AmerGen

SHEET 1 OF 1 | LR-302-844 | 0

DRAWN LR-302-844 SH. 1

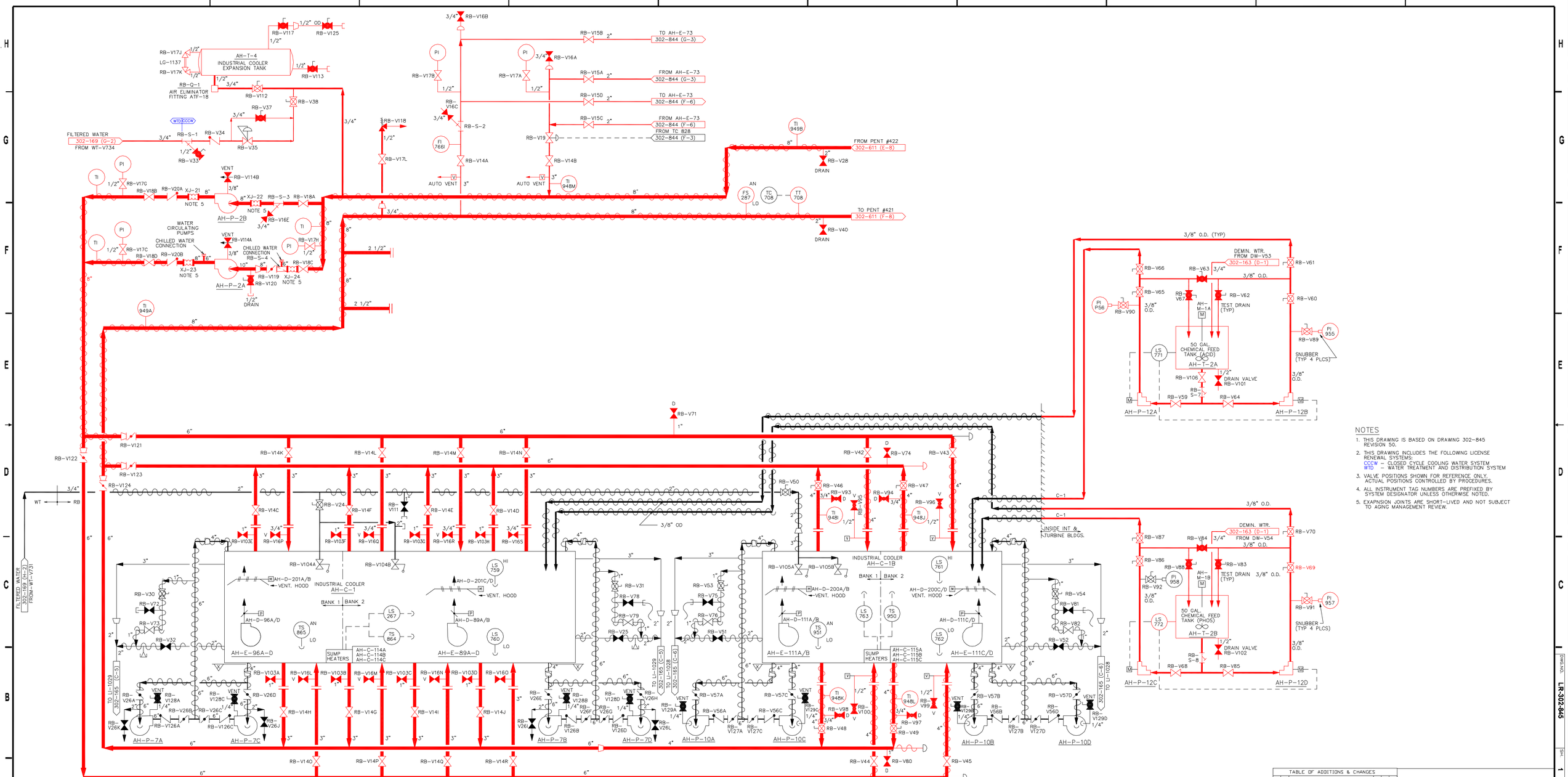

NOTES

1. THIS DRAWING IS BASED ON DRAWING 302-845 REVISION 50.
2. THIS DRAWING INCLUDES THE FOLLOWING LICENSE RENEWAL SYSTEMS:
   CCCW – CLOSED CYCLE COOLING WATER SYSTEM
   WTD – WATER TREATMENT AND DISTRIBUTION SYSTEM
3. VALVE POSITIONS SHOWN FOR REFERENCE ONLY. ACTUAL POSITIONS CONTROLLED BY PROCEDURES.
4. ALL INSTRUMENT TAG NUMBERS ARE PREFIXED BY SYSTEM DESIGNATOR UNLESS OTHERWISE NOTED.
5. EXAPNSION JOINTS ARE SHORT-LIVED AND NOT SUBJECT TO AGING MANAGEMENT REVIEW.

TABLE OF ADDITIONS & CHANGES

NO	DATE	DESCRIPTION	REV'D	CHK'D	APP'D
0	01 03 08	INITIAL ISSUE FOR LICENSE RENEWAL	A B	D P C	M A M

MECHANICAL

LICENSE RENEWAL DRAWING
INDUSTRIAL COOLING SYSTEM
FLOW DIAGRAM
COOLING WATER

THREE MILE ISLAND
AmerGen

SHEET 1 OF 1 | LR-302-845 | 0

DWG NO. LR-302-845 SH 1

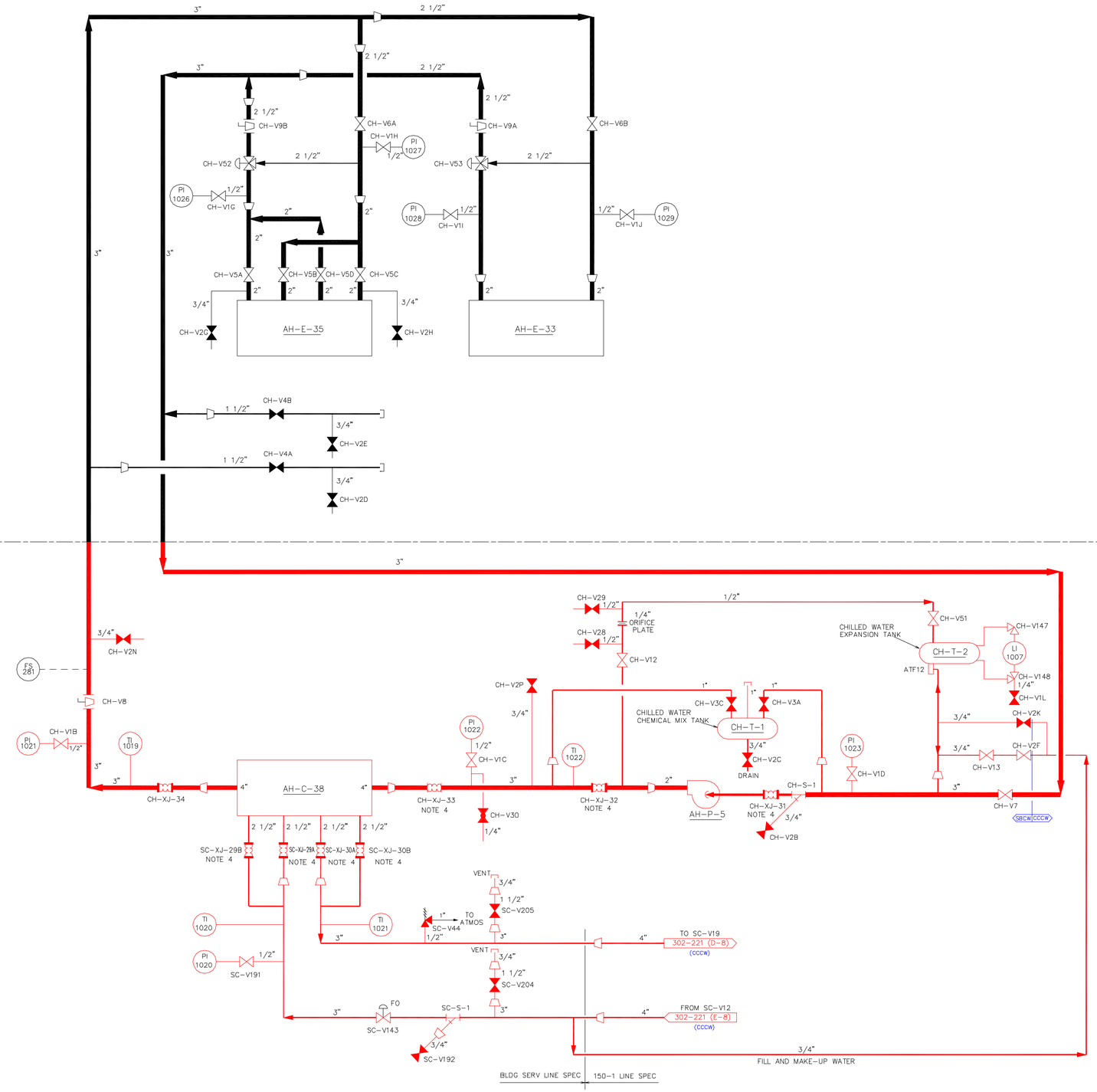

NOTES

1. THIS DRAWING IS BASED ON DRAWING 302-846, REVISION 20.
2. THIS DRAWING INCLUDES THE FOLLOWING LICENSE RENEWAL SYSTEMS:
   CCCW – CLOSED CYCLE COOLING WATER SYSTEM
   SBCW – SERVICE BUILDING CHILLED WATER SYSTEM
3. THE SHELL SIDE OF AH-C-38 IS EVALUATED FOR AGING MANAGEMENT WITH THE MISCELLANEOUS VENTILATION SYSTEMS. THE TUBE SIDE IS CONTAINED WITHIN THE HEAT EXCHANGER AND WILL NOT CREATE SPATIAL INTERACTIONS.
4. EXPANSION JOINTS CH-XJ-31, CH-XJ-32, CH-XJ-33, SC-XJ-29A/B, AND SC-XJ-30A/B ARE CONSIDERED SHORT-LIVED COMPONENTS AND ARE NOT SUBJECT TO AGING MANAGEMENT REVIEW.
5. VALVE POSITIONS SHOWN FOR REFERENCE ONLY. ACTUAL POSITIONS CONTROLLED BY PROCEDURES.
6. ALL INSTRUMENT TAG NUMBERS ARE PREFIXED BY SYSTEM DESIGNATOR UNLESS OTHERWISE NOTED.

TABLE OF ADDITIONS & CHANGES

NO	DATE	DESCRIPTION	REV'D	CHK'D	APP'D
0	01 03 08	INITIAL ISSUE FOR LICENSE RENEWAL	A B	W H F	D P C

MECHANICAL

LICENSE RENEWAL DRAWING
CHILLED WATER
SERVICE BUILDING
FLOW DIAGRAM

THREE MILE ISLAND
AmerGen

SHEET 1 OF 1 | LR-302-846 | 0

DWG.NO. LR-302-846 SH. 1

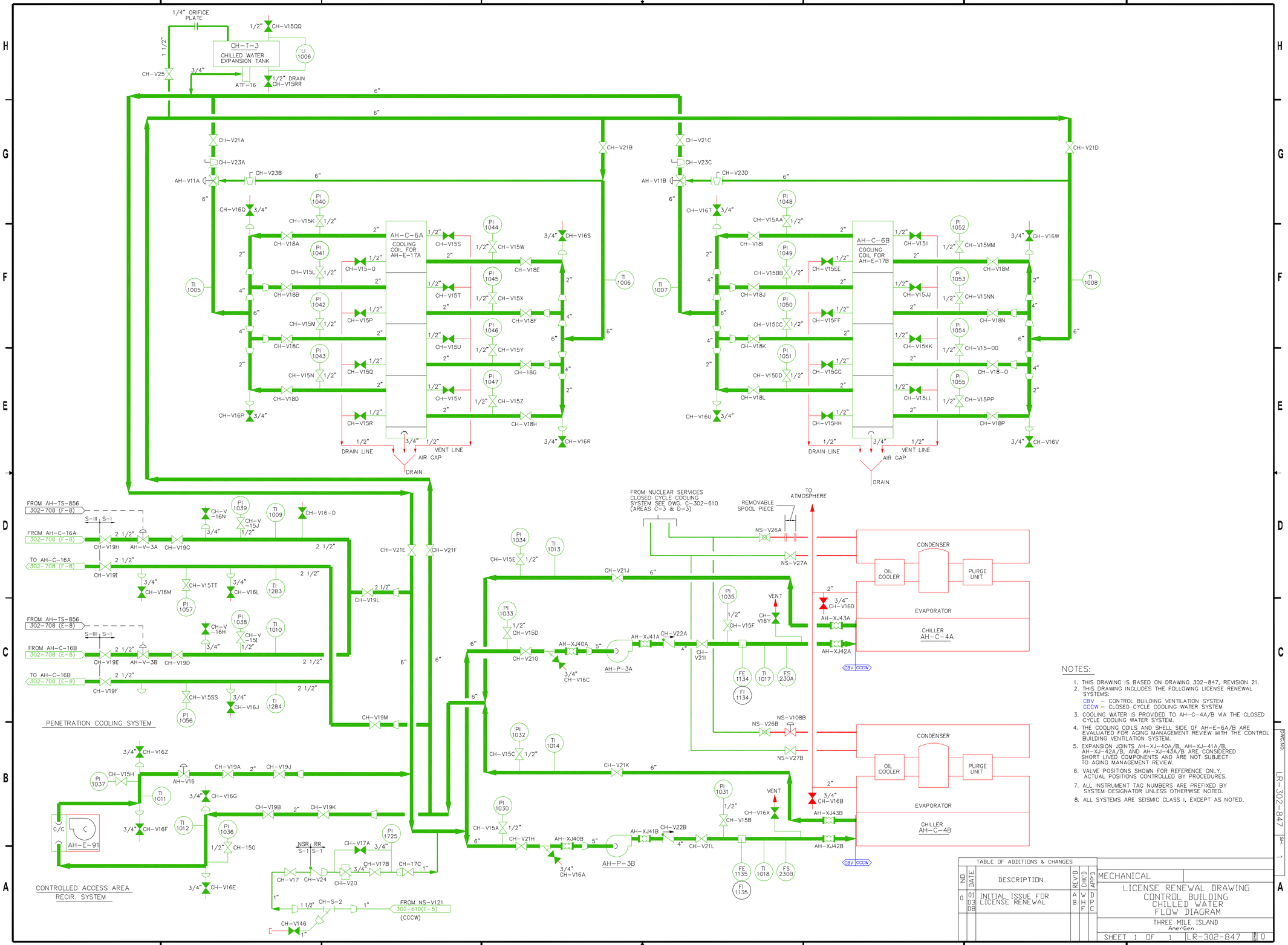

NOTES:

1. THIS DRAWING IS BASED ON DRAWING 302-847, REVISION 21.
2. THIS DRAWING INCLUDES THE FOLLOWING LICENSE RENEWAL SYSTEMS:
   CBV – CONTROL BUILDING VENTILATION SYSTEM
   CCCW – CLOSED CYCLE COOLING WATER SYSTEM
3. COOLING WATER IS PROVIDED TO AH-C-4A/B VIA THE CLOSED CYCLE COOLING WATER SYSTEM.
4. THE COOLING COILS AND SHELL SIDE OF AH-E-6A/B ARE EVALUATED FOR AGING MANAGEMENT REVIEW WITH THE CONTROL BUILDING VENTILATION SYSTEM.
5. EXPANSION JOINTS AH-XJ-40A/B, AH-XJ-41A/B, AH-XJ-42A/B, AND AH-XJ-43A/B ARE CONSIDERED SHORT LIVED COMPONENTS AND ARE NOT SUBJECT TO AGING MANAGEMENT REVIEW.
6. VALVE POSITIONS SHOWN FOR REFERENCE ONLY. ACTUAL POSITIONS CONTROLLED BY PROCEDURES.
7. ALL INSTRUMENT TAG NUMBERS ARE PREFIXED BY SYSTEM DESIGNATOR UNLESS OTHERWISE NOTED.
8. ALL SYSTEMS ARE SEISMIC CLASS I, EXCEPT AS NOTED.

TABLE OF ADDITIONS & CHANGES

NO	DATE	DESCRIPTION	REV'D	CHK'D	APP'D
0	01 03 08	INITIAL ISSUE FOR LICENSE RENEWAL	A B	W H F	D P C

MECHANICAL

LICENSE RENEWAL DRAWING
CONTROL BUILDING
CHILLED WATER
FLOW DIAGRAM

THREE MILE ISLAND
AmerGen

SHEET 1 OF 1 | LR-302-847 | REV 0

DWG.NO. LR-302-847 SH. 1

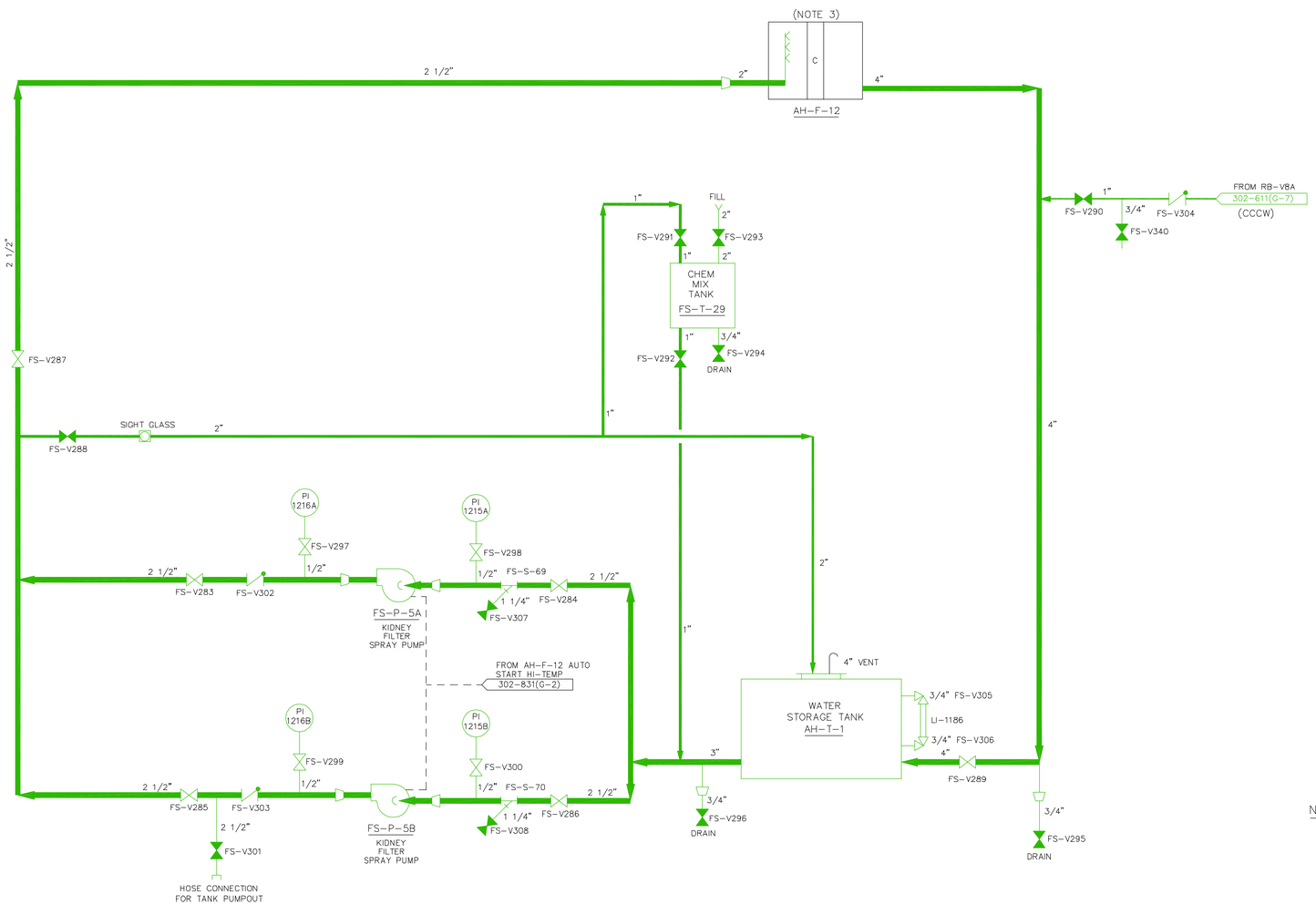

NOTES:

1. THIS DRAWING IS BASED ON DRAWING 302-848, REVISION 11.
2. THIS DRAWING INCLUDES THE FOLLOWING LICENSE RENEWAL SYSTEMS:
   FP – FIRE PROTECTION SYSTEM
3. FILTER ASSEMBLY (SHOWN IN BLACK) DOES NOT PERFORM AN INTENDED FUNCTION.

TABLE OF ADDITIONS & CHANGES

NO	DATE	DESCRIPTION	REV'D	CHK'D	APP'D
0	01 03 03	INITIAL ISSUE FOR LICENSE RENEWAL	T W	S C G	D P C

MECHANICAL

LICENSE RENEWAL DRAWING
CHARCOAL SPRAY SYSTEM
REACTOR BUILDING
FLOW DIAGRAM

THREE MILE ISLAND
AmerGen

SHEET 1 OF 1 LR-302-848 REV 0

DWG.NO. LR-302-848 SH. 1

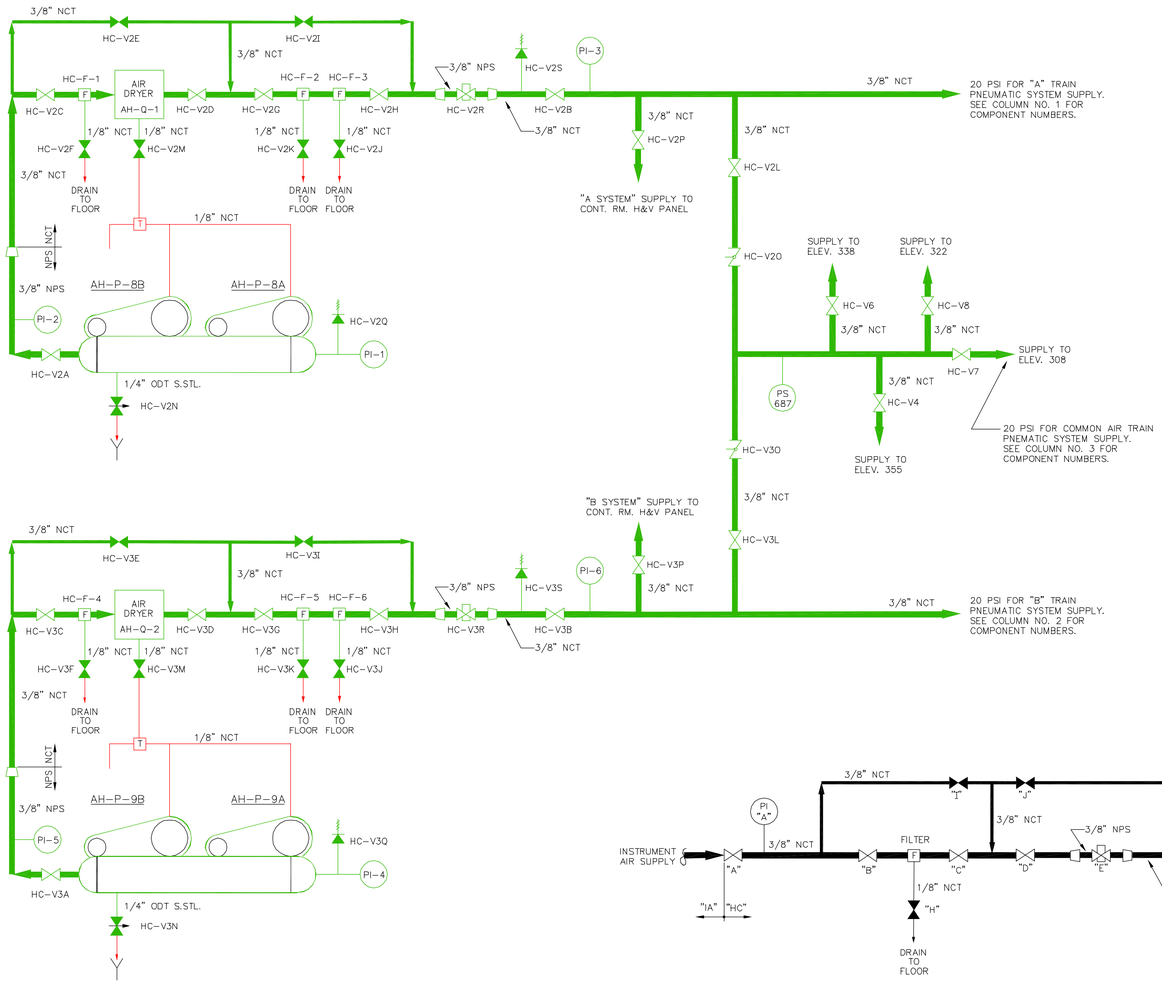

COLUMN NO. 1		COLUMN NO. 2		COLUMN NO. 3	
"A" TRAIN AIR SUPPLY TO:	JOHNSON SERVICE CO. DRAWING	"B" TRAIN AIR SUPPLY TO:	JOHNSON SERVICE CO. DRAWING	COMMON AIR SUPPLY FROM "A" OR "B" TRAIN TO:	JOHNSON SERVICE CO. DRAWING
AH-E-17A	057-47-5I 057-47-5II 057-47-5III 057-47-5IV	AH-E-17B	057-47-5I 057-47-5II 057-47-5III 057-47-5IV	AH-E-21	057-47-6
				AH-E-26	057-47-8
				AH-E-20A AND AH-E-20B	057-47-7
AH-E-18A	057-47-5I 057-47-5II 057-47-5III 057-47-5IV	AH-E-18B	057-47-5I 057-47-5II 057-47-5III 057-47-5IV	AH-E-93A AND AH-E-93B	057-47-25
				AH-E-94A AND AH-E-94B	057-47-25
				AH-C-7C THRU AH-C-7E	057-47-6
AH-E-19A	057-47-5I 057-47-5II 057-47-5III 057-47-5IV	AH-E-19B	057-47-5I 057-47-5II 057-47-5III 057-47-5IV	AH-C-8A THRU AH-C-8D	057-47-6
				AH-C-9A THRU AH-C-9G	057-47-6
				AH-C-10A THRU AH-C-10B	057-47-6
AH-E-95A	057-47-26	AH-E-95B	057-47-26	AH-C-10K, FLOW RECORDER FR 148, GRADUAL SWITCH S-1 ISOLATION DAMPER SYSTEM ASSOCIATED CONTROL DEVICES	057-47-6 057-47-5I 057-47-5II 057-47-5III 057-47-5IV
AH-C-5AA	057-47-5I 057-47-5II 057-47-5III 057-47-5IV	AH-C-4B	057-47-9I 057-47-9II		
		AH-C-5BA	057-47-5I 057-47-5II 057-47-5III 057-47-5IV		
AH-C-5AB	057-47-5I 057-47-5II 057-47-5III 057-47-5IV	AH-C-5BB	057-47-5I 057-47-5II 057-47-5III 057-47-5IV		
ASSOCIATED CONTROL DEVICES	N/A	ASSOCIATED CONTROL DEVICES	N/A		

NOTES

1. THIS DRAWING IS BASED ON DRAWING 302-850 REVISION 4.
2. THIS DRAWING INCLUDES THE FOLLOWIN LICENSE RENEWAL SYSTEMS:
   CBV – CONTROL BUILDING VENTILATION SYSTEM.
3. VALVE POSITION ARE FOR REFERENCE ONLY ACTUAL POSITION CONTROLLED BY PROCEDURES.
4. ALL INSTRUMENT TAG NUMBERS ARE PREFIXED BY SYSTEM DESIGNATOR UNLESS OTHERWISE NOTED.
5. ALL SYSTEMS ARE CLASS S-III UNLESS OTHERWISE NOTED.

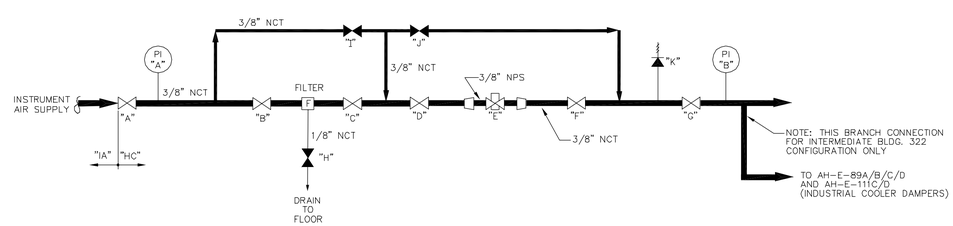

TYPICAL PRESSURE REDUCING STATION
(SEE TABLE BELOW FOR TAG NUMBERS)

COMPONENT IDENTIFICATION SCHEDULE

"A"	"B"	"C"	"D"	"E"	"F"	"G"	"H"	"I"	"J"	"K"	FILTER	PI-"A"	PI-"B"	SERVICE TO :	BLDG./EL.
V10A	V10B	V10C	V10D	V10E	V10F	V10G	V10H	V10I	V10J	V10K	F8	9	10	AH-E-31,33,35	SERV. BLDG. 321
V11A	V11B	V11C	V11D	V11E	V11F	V11G	V11H	V11I	V11J	V11K	F9	11	12	AH-E-53A/B,55A/B,56,62,63,64	SOUTH HTR. BAY 322
V12A	V12B	V12C	V12D	V12E	V12F	V12G	V12H	V12I	V12J	V12K	F10	13	14	AH-E-50,54	SWITCHGEAR RM. 322
V13A	V13B	V13C	V13D	V13E	V13F	V13G	V13H	V13I	V13J	V13K	F11	15	16	AH-E-51,52	NORTH HTR. BAY 322
V15A	V15B	V15C	V15D	V15E	V15F	V15G	V15H	V15I	V15J	V15K	F13	19	20	AH-E-27A/B	INT. PMP. HSE. 308
V16A	V16B	V16C	V16D	V16E	V16F	V16G	V16H	V16I	V16J	V16K	F14	21	22	AH-E-8A/B,10,11	AUX. BLDG. 281
V17A	V17B	V17C	V17D	V17E	V17F	V17G	V17H	V17I	V17J	V17K	F15	23	24	AH-E-7A/B,12,14A/D,15A/B	AUX. BLDG. 305
V18A	V18B	V18C	V18D	V18E	V18F	V18G	V18H	V18I	V18J	V18K	F16	25	26	AH-E-24A/B	INTER. BLDG. 295
V19A	V19B	V19C	V19D	V19E	V19F	V19G	V19H	V19I	V19J	V19K	F17	27	28	AH-E-29A	DIES. GEN. BLDG. 295
V20A	V20B	V20C	V20D	V20E	V20F	V20G	V20H	V20I	V20J	V20K	F18	29	30	AH-E-29B	DIES. GEN. BLDG. 295
V21A	V21B	V21C	V21D	V21E	V21F	V21G	V21H	V21I	V21J	V21K	F19	31	32	AH-E-6A/B,73, AND IND. CLR.	INTER. BLDG. 322
V22A	V22B	V22C	V22D	V22E	V22F	V22G	V22H	V22I	V22J	V22K	F20	33	34	AH-E-9A/B	INTER. BLDG. 305

TABLE OF ADDITIONS & CHANGES

NO.	DATE	DESCRIPTION	REV'D	CHK'D	APP'D
0	01 03 03	INITIAL ISSUE FOR LICENSE RENEWAL	TW	WHT	DPC

MECHANICAL

LICENSE RENEWAL DRAWING

CONT. BLDG. HVAC PNUEMATIC CONTROL
COMP. AIR SYS.&TYP. PRESS. RED. STATIONS
FLOW DIAGRAM

THREE MILE ISLAND
AmerGen

SHEET 1 OF 1 LR-302-850 REV 0

DWG.NO. LR-302-850 SH. 1

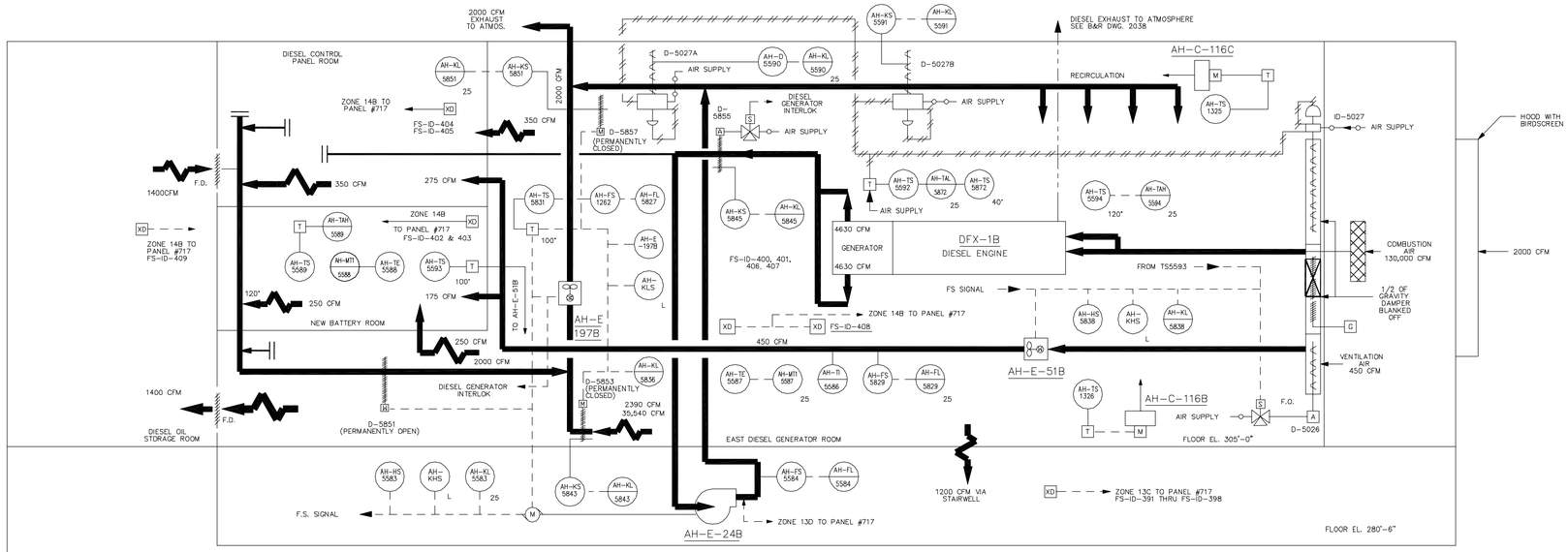

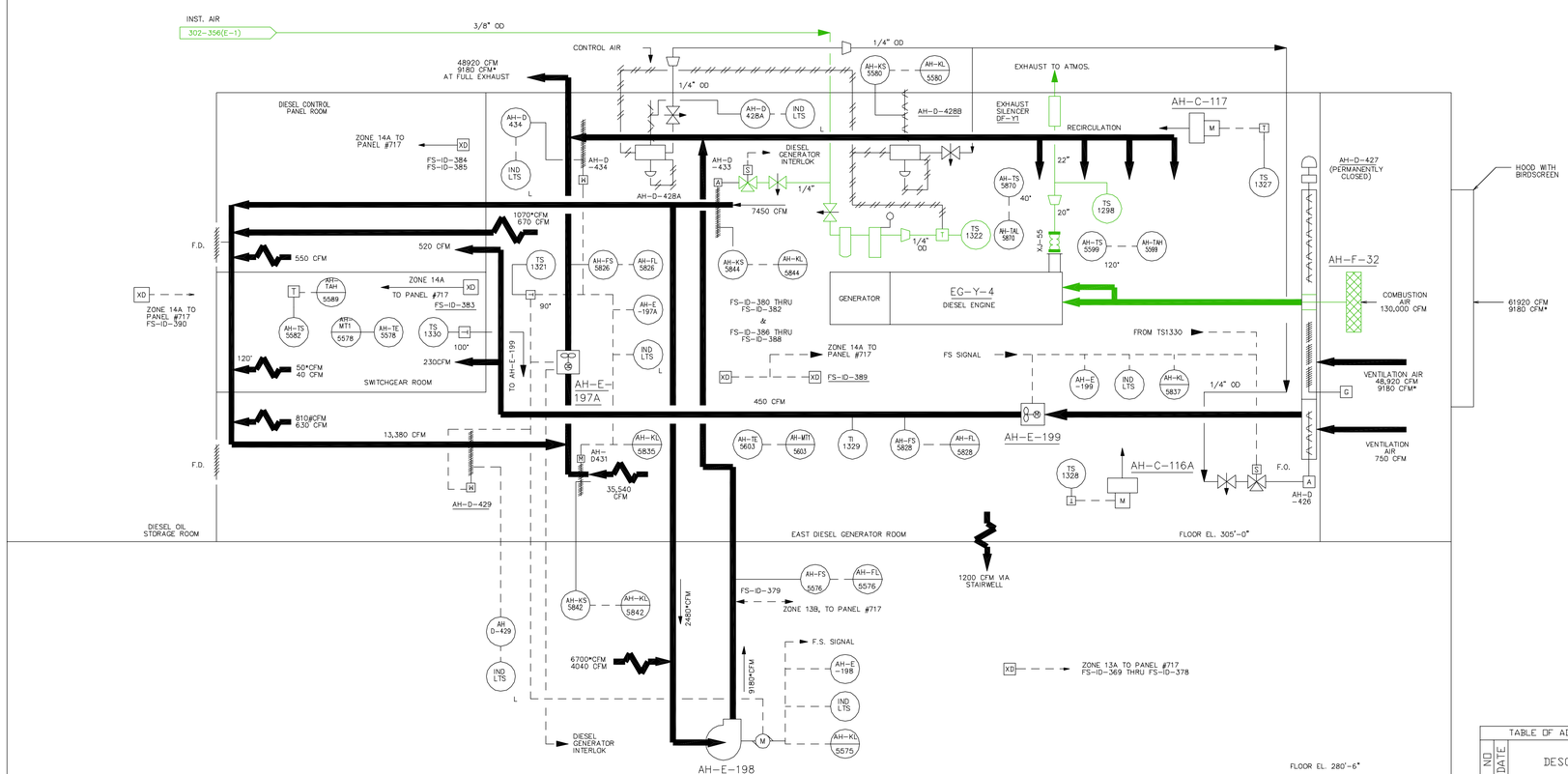

NOTES

1. THIS DRAWING IS BASED ON DRAWING 302-881, REVISION 2.
2. THIS DRAWING INCLUDES THE FOLLOWING LICENSE RENEWAL SYSTEMS:
   DGBV – DIESEL GENERATOR BUILDING VENTILATION SYSTEM
   SBO – SYSTEM BLACKOUT AND UPS DIESEL GENERATOR SYSTEMS
3. VALVE POSITIONS SHOWN FOR REFERENCE ONLY. ACTUAL POSITIONS CONTROLLED BY PROCEDURES.
4. ALL INSTRUMENT TAG NUMBERS ARE PREFIXED BY SYSTEM DESIGNATOR UNLESS OTHERWISE NOTED.

TABLE OF ADDITIONS & CHANGES

NO	DATE	DESCRIPTION	REV'D	CHK'D	APP'D
0	01 03 83	INITIAL ISSUE FOR LICENSE RENEWAL	A B	W H F	D P C

MECHANICAL

LICENSE RENEWAL DRAWING
STATION BLACKOUT DIESEL GENERATOR FLOW DIAGRAM
HEATING AND VENTILATION FOR EG-Y-4

THREE MILE ISLAND
AmerGen

SHEET 1 OF 1 LR-302-881 0

DWG.NO. LR-302-881 SH. 1